DOC # 2010-0223971

MAY 04, 2010 2:39 PM

OFFICIAL RECORDS
SAN DIEGO COUNTY RECORDER'S OFFICE
DAVID L. BUTLER, COUNTY RECORDER
FEES: 21.00

PAGES: 5

Recording Requested By and
When Recorded Return To:

TOWERCO ASSETS LLC
Attn: Legal
5000 Valleystone Drive
Cary, NC 27519

10841

APN# 548-175-01-00

Space above for Recorder's Use

MEMORANDUM OF LEASE

THIS MEMORANDUM OF LEASE ("Memorandum") is effective as of April 16, 2010 (the Effective Date").

1. THE CITY OF SAN DIEGO, a California municipal corporation ("CITY"), as lessor. with offices at 1200 Third Avenue, M.S. 51A, San Diego, CA 92101-4155, and NEXTEL OF CALIFORNIA, INC., a Delaware corporation, together with any of its subsidiaries or affiliates including SPRINT PCS ASSETS, L.L.C., a Delaware limited liability company ("Sprint/Nextel"), as lessee, entered into that certain CITY OF SAN DIEGO TELECOM MASTER LEASE AGREEMENT (the "Lease") dated January 8, 2007, as amended, for the purpose of installing, constructing, modifying, maintaining, operating, and removing a communications facility as set forth in the Lease.

2. Sprint/Nextel assigned all its right, title, and interest under the Lease in and to Sprint/Nextel Site No. SD34XC521, located at 3434 Ocean View Boulevard, San Diego, CA, to TOWER ENTITY 7 LLC, a Delaware limited liability company ("Tower Entity"), by that certain ASSIGNMENT AND ASSUMPTION OF GROUND LEASE dated September 23, 2008.

3. Tower Entity was acquired and merged into TOWERCO ASSETS LLC, a Delaware limited liability company ("TowerCo"), with offices at 5000 Valleystone Drive, Cary, North Carolina 27519.

4. The term of the Lease is ten (10) years, commencing on January 5, 2007.

5. The land which is the subject of the Lease is ***APN# 548-175-01-00,*** described in attached Exhibit "A." The portion of the real property being leased to LESSEE is set forth in the Lease.

6. TowerCo hereby acknowledges that the current Neighborhood Use Permit expires December 11, 2012, and that there is no assurance it will be renewed upon its expiration. As

more specifically set forth in the Lease, failure to obtain a new Neighborhood Use Permit would be a breach of the Lease (see Section 11.1, Compliance with Law).

7. This Memorandum shall give notice of the Lease and the rights created thereby, all of which are hereby confirmed.

8. This Memorandum may be executed in two or more counterparts, all of which together shall be considered a single document and effective as of the Effective Date only when signed and delivered by all parties.

IN WITNESS WHEREOF, this Memorandum is executed to be effective as of the Effective Date.

[SIGNATURE PAGES FOLLOW]

IN WITNESS WHEREOF, the parties have executed this Memorandum as of the latter of the signature dates below.

LESSOR:
THE CITY OF SAN DIEGO, a California municipal corporation

By: _____

Name: **James F. Barwick, CCIM**
Director, Real Estate Assets

Title: _____

Date: April 16, 2010

LESSOR ACKNOWLEDGMENT

State of California

County of San Diego

On April 16, 2010 before me, Teresa Dolores Morse, Notary Public
(Here insert name and title of the officer)
personally appeared James F. Barwick,
who proved to me on the basis of satisfactory evidence to be the person(s) whose name(s) is/are subscribed to the within instrument and acknowledged to me that he/she/they executed the same in his/her/their authorized capacity(ies), and that by his/her/their signature(s) on the instrument the person(s), or the entity upon behalf of which the person(s) acted, executed the instrument.

I certify under PENALTY OF PERJURY under the laws of the State of California that the foregoing paragraph is true and correct.

WITNESS my hand and official seal.

Teresa Dolores Morse
Signature of Notary Public

(Notary Seal)

TERESA DOLORES MORSE
Commission # 1729959
Notary Public - California
San Diego County
My Comm. Expires Mar 9, 2011

LESSEE:
TOWERCO ASSETS LLC, a Delaware limited liability company

By: Daniel Hunt

Name: Daniel Hunt

Title: Vice President and CFO

Date: 4/26/2010

LESSEE ACKNOWLEDGMENT

State of North Carolina

County of Wake

On 4/26/2010 before me, Jill E. Miraglia, Notary Public
(Here insert name and title of the officer)
personally appeared Daniel Hunt, Vice President and CFO,
who proved to me on the basis of satisfactory evidence to be the person(s) whose name(s) is/are subscribed to the within instrument and acknowledged to me that he/she/they executed the same in his/her/their authorized capacity(ies), and that by his/her/their signature(s) on the instrument the person(s), or the entity upon behalf of which the person(s) acted, executed the instrument.

I certify under PENALTY OF PERJURY under the laws of the State of North Carolina that the foregoing paragraph is true and correct.

WITNESS my hand and official seal.

Jill E. Miraglia
Signature of Notary Public

(Notary Seal)

JILL E. MIRAGLIA
NOTARY PUBLIC
WAKE COUNTY, N.C.
My Commission Expires 7/26/2010

ATTACHMENT A
LAND

Property located in San Diego, CA

All of the Lots 4, 5, 6 and 7 in Block F of Turnbull's subdivision according to Map No. 1471 filed August 27, 1912 in the Office of the County Recorder; together with portions of Lots 2, 3, 8, 9, 10, 11, 12, 13 and 14 in said Block F, also together with portions of Lots 9, 10, 11 and 12 in Block G of said Turnbull's subdivision.

Tax Parcel No. 548-175-01-00

ADDENDUM TO
CITY OF SAN DIEGO TELECOM MASTER LEASE AGREEMENT

This Addendum ("Addendum") to that certain City of San Diego Telecom Master Lease Agreement dated JANUARY 5, 2007 ("Master Lease"), by and between the CITY OF SAN DIEGO, a California municipal corporation ("CITY"), and NEXTEL OF CALIFORNIA, INC., a Delaware corporation, together with any of its subsidiaries or affiliates that may enter into the Master Lease including SPRINT PCS ASSETS, L.L.C., a Delaware limited liability company ("LESSEE"), is made by and between CITY and LESSEE to be effective upon execution by CITY (the "Addendum Effective Date") and approval by the City Attorney. The terms used in this Addendum shall have the same meaning as such terms have in the Master Lease.

CITY hereby agrees to lease portions of the property described in Exhibit "I" – Legal Description, attached to this Addendum and by this reference made part of the Master Lease, which shall be referred to as the "Site." LESSEE leases from CITY that portion of the Site described in Exhibit "II" – Site Plan/Location, attached to this Addendum and by this reference made part of the Master Lease, which portion shall be referred to as the "Premises," all upon the terms and conditions set forth in the Master Lease.

This Addendum is executed by CITY, acting by and through its City Manager, and by LESSEE, acting by and through its lawfully authorized signatory, to be effective as of the Addendum Effective Date.

Date: 1/5/07

THE CITY OF SAN DIEGO, a California municipal corporation

By: _____
Name: J. F. BARWICK
Title: DIRECTOR: REAL

Date: 1/4/07

LESSEE:
NEXTEL OF CALIFORNIA, INC., a Delaware corporation

By: _____
Name: Christopher T. Glass
Title: Manager of Strategic Sites

SPRINT PCS ASSETS, L.L.C., a Delaware limited liability company

By: _____
Name: Christopher T. Glass
Title: Manager of Strategic Sites

Date: January 8, 2007

ENVIRONMENTAL ANALYSIS SECTION
ENVIRONMENTAL CLEARANCE:

By: Kenneth Teasley
Name: KENNETH TEASLEY
Title: Senior Planner

APPROVED as to form and legality this 8TH day of JANUARY, 2007.

MICHAEL J. AGUIRRE, City Attorney

By:
Name: BROCK LADEWIG
Title: CHIEF DEPUTY CITY ATTORNEY

3434 Oceanview Boulevard
Fire Station 19
S587FS/002/A00
SD34XC521

EXHIBIT I – Legal Description.

EXHIBIT A

All of the Lots 4, 5, 6 and 7 in Block F of Turnbull's subdivision according to Map No. 1471 filed August 27, 1912 in the Office of the County Recorder; together with portions of Lots 2, 3, 8, 9, 10, 11, 12, 13 and 14 in said Block F, also together with portions of Lots 9, 10, 11 and 12 in Block G of said Turnbull's subdivision.

Said lots and portions, thereof, together with the underlying fee in the public ways are included in the following description:

Commencing at the Southeast corner of said Lot 9 of Block G; thence along the East line of last said Lot 9 North 00' 05' 33" East, 8.96 feet to the true Point of Beginning; thence along the following numbered courses: (1) leaving said East line North 89' 55' 04" West, 49.56 feet; (2) North 16' 52' 06" East, 309.77 feet; (3) from a tangent which bears North 53' 06' 23" East, along a non-tangent curve to the right having a radius of 96.98 feet, through an angle of 92' 05' 26", a distance of 155.87 feet; (4) along a tangent line South 34' 48' 11" East, 120.63 feet; (5) from a tangent which bears South 34' 31' 57" East, along a non-tangent curve to the right, having a radius of 100.00 feet, through an angle of 19' 17' 41", a distance of 33.68 feet; (6) along a non-tangent line South 15' 28' 37" East, 128.20 feet; (7) from a tangent which bears South 03' 29' 52" West, along a non-tangent curve to the right; having a radius of 20.0 feet, through an angle of 83' 00' 27", a distance of 28.98 feet; (8) along a non-tangent line South 36' 32' 10" West, 47.73 feet; (9) North 89' 55' 04" West, 228.06 feet to the true Point of Beginning.

I:\WPO\2003\NOVINS\LEGAL DESCRIPTION 2.doc

S587FS - ØØ2 - AØØ

EXHIBIT II – Site Plan/Location.

EXHIBIT B

Sprint PCS SM

FIRE STATION #19
SD34XC521
3434 "B" OCEANVIEW BLVD.
SAN DIEGO, CA 92113
CITY OF SAN DIEGO

ZONING APP# / CIP# 41-0875-11 (PTS # 4033)

ZONING INFORMATION

LEGAL DESCRIPTION PER TITLE REPORT:
ALL OF LOTS 4, 5, 6 AND 7 IN BLOCK F OF TURNBULL'S SUBDIVISION ACCORDING TO MAP NO. 1471 FILED AUGUST 27, 1912, IN THE OFFICE OF THE COUNTY RECORDER TOGETHER WITH PORTIONS OF LOTS 2, 3, 8, 9, 10, 11, 12, 13 AND 14 IN SAID BLOCK F, ALSO TOGETHER WITH PORTIONS OF LOTS 9, 10, 11 AND 12 IN BLOCK G OF SAID TURNBULL'S SUBDIVISION.

SAID LOTS AND PORTIONS THEREOF, TOGETHER WITH THE UNDERLYING FEE IN THE PUBLIC WAYS ARE INCLUDED IN THE FOLLOWING DESCRIPTION:

COMMENCING AT THE SOUTHEAST CORNER OF SAID LOT 9 OF BLOCK G; THENCE ALONG THE EAST LINE OF LAST SAID LOT 9 NORTH 00°03'30" EAST, 8.99 FEET TO THE TRUE POINT OF BEGINNING; THENCE ALONG THE FOLLOWING NUMBERED COURSES: (1) LEAVING SAID EAST LINE NORTH 89°53'04" WEST, 48.84 FEET; (2) NORTH 16°32'09" EAST, 308.77 FEET; (3) FROM A TANGENT WHICH BEARS NORTH 03°06'23" EAST, ALONG A NON-TANGENT CURVE TO THE RIGHT HAVING A RADIUS OF 98.88 FEET, THROUGH AN ANGLE OF 02°05'28", A DISTANCE OF 185.87 FEET; (4) ALONG A TANGENT LINE SOUTH 34°46'11" EAST, 128.43 FEET; (5) FROM A TANGENT WHICH BEARS SOUTH 34°31'57" EAST, ALONG A NON-TANGENT CURVE TO THE RIGHT, HAVING A RADIUS OF 100.00 FEET, THROUGH AN ANGLE OF 18°17'41", A DISTANCE OF 33.89 FEET; (6) ALONG A NON-TANGENT LINE SOUTH 15°28'37" EAST, 128.30 FEET; (7) FROM A TANGENT WHICH BEARS SOUTH 03°29'52" WEST, ALONG A NON-TANGENT CURVE TO THE RIGHT, HAVING A RADIUS OF 20.00 FEET, THROUGH AN ANGLE OF 83°00'27", A DISTANCE OF 28.98 FEET; (8) ALONG A NON-TANGENT LINE SOUTH 89°32'16" WEST, 47.73 FEET; (9) NORTH 89°53'04" WEST, 228.08 FEET TO THE TRUE POINT OF BEGINNING.

LEGAL DESCRIPTION OF LEASE HOLDINGS:
BEGINNING AT THE SOUTHEAST CORNER OF SAID LOT 9 OF BLOCK G; THENCE NORTH 07°48'38" EAST, 153.73 FEET TO THE TRUE POINT OF BEGINNING; THENCE NORTH 89°36'13" WEST, 12.00 FEET; THENCE NORTH 00°03'47" EAST, 22.00 FEET; THENCE SOUTH 89°56'13" EAST, 12.00 FEET; THENCE SOUTH 00°03'47" WEST, 22.00 FEET TO THE TRUE POINT OF BEGINNING.

LEGAL DESCRIPTION

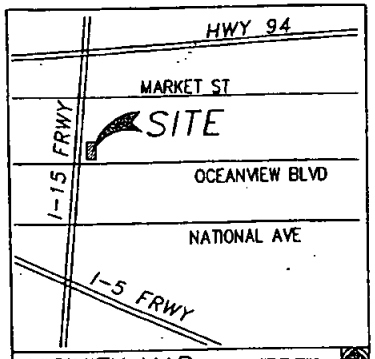

VICINITY MAP

NOT TO SCALE

FROM SAN DIEGO INTERNATIONAL AIRPORT.

EXIT AIRPORT AND HEAD NORTH ON I-5 TO I-8, GO EAST ON I-8 TO I-15 NORTH, THEN EXIT ON OCEAN VIEW BLVD., TURN RIGHT ON OCEAN VIEW BLVD AND THE FIRE STATION IS IMMEDIATELY ON THE RIGHT SIDE OF THE STREET.

3434 OCEAN VIEW BLVD.
SAN DIEGO, CA 92113

DRIVING DIRECTIONS

Sony LCs on SDFD

SPECIAL INSPECTION REQUIRED	
ITEM	REMARKS
MONOPOLE FOUNDATION EXCAVATION	SEE SO-S2
MONOPOLE FOUNDATION CONSTRUCTION	SEE SO-S2
MONOPOLE ANCHOR BOLT INSTALLATION	SEE SO-S2
MONOPOLE CONCRETE STRENGTH	SEE SO-S2
MONOPOLE HIGH STRENGTH	SEE SO-S2

SPECIAL INSPECTOR, DEPUTY INSPECTOR, SPECIAL INSPECTION AGENCY: IS THE PERSON EMPLOYED BY THE BUILDING OWNER, THE ENGINEER OR ARCHITECT OF RECORD, OR AN AUTHORIZED AGENT OF THE BUILDING OWNER. THIS PERSON SHALL PROVIDE INSPECTION DURING CONSTRUCTION ON SPECIFIC TYPE OF WORK WHICH ARE REQUIRED TO HAVE SPECIAL INSPECTIONS. THIS PERSON MUST BE APPROVED BY THE BUILDING OFFICIAL.
"A CERTIFICATE OF SATISFACTORY COMPLETION OF WORK REQUIRING SPECIAL INSPECTION MUST BE COMPLETED AND SUBMITTED TO THE INSPECTION SERVICES DIVISION."

SPECIAL INSPECTION REQ.

1. THIS IS AN UNMANNED TELECOMMUNICATION FACILITY CONSISTING OF BTS EQUIPMENT AND PANEL ANTENNAS.
2. RADIO FREQUENCY POWER & SIGNAL FROM THE ANTENNA SHALL NOT INTERFERE WITH ANY EXISTING COMMUNICATION SITE. ALL ITEMS SHOWN HEREON ARE EXISTING UNLESS OTHERWISE NOTED.
3. THIS IS AN UNMANNED FACILITY - NO SOLID WASTE. THE SITE WILL CREATE NO TRASH. THUS REQUIRES NO DUMPSTER.
4. DEVELOPMENT AND USE OF THE SITE WILL COMPORM TO ALL APPLICABLE CODES AND ORDINANCES.
5. EMERGENCY POWER SUPPLY IS A GEL PACK BATTERY SOURCE AND NOT A FLAMMABLE LIQUID SOURCE.

PROJECT DESCRIPTION

ALL WORK AND MATERIALS SHALL BE PERFORMED AND INSTALLED IN ACCORDANCE WITH THE CURRENT EDITIONS OF THE FOLLOWING CODES AS ADOPTED BY THE LOCAL JURISDICTIONAL AUTHORITIES. NOTHING IN THESE PLANS IS TO BE CONSTRUED TO PERMIT WORK NOT CONFORMING TO THE LATEST EDITIONS OF THE FOLLOWING CODES.

1. CALIFORNIA ADMINISTRATIVE CODE (INCL. TITLES 24 & 25)
2. 1998 CALIFORNIA BUILDING CODE
3. BUILDING OFFICIALS AND CODE ADMINISTRATORS (BOCA)
4. UNIFORM MECHANICAL CODE
5. ANSI/EIA-222-F LIFE SAFETY CODE 1079-101
6. UNIFORM PLUMBING CODE
7. 1998 CALIFORNIA ELECTRIC CODE
8. LOCAL BUILDING CODE
9. CITY/COUNTY ORDINANCES

CODE COMPLIANCE

APPLICANT/LESSEE

SPRINT PCS ASSETS L.L.C., A DELAWARE LIMITED LIABILITY COMPANY, FORMERLY KNOWN AS COX PCS ASSETS L.L.C.
2650 CAMINO DEL RIO NORTH, SUITE 100
SAN DIEGO, CA 92108
CONTACT: STEVE SEBAUGH PHONE: (619) 220-7917

APPLICANT/REPRESENTATIVE

EAGLE TCS INC.
7365 MISSION GORGE RD, SUITE F
SAN DIEGO, CA 92120
CONTACT: TIM HEMKEN
PHONE: (619) 229-6191

PROPERTY INFORMATION

OWNER:	CITY OF SAN DIEGO
CONTACT:	LARRY GIZASON
ADDRESS:	3878 KEARNY VILLA ROAD SAN DIEGO, CA 92123
PHONE:	(858) 573-1369
AREA OF CONSTRUCTION:	± 264 SQ.FT.
OCCUPANCY:	S2
CONSTRUCTION TYPE:	TYPE V-N
ZONE:	R-1
A.P.N.:	546-173-01-00
HANDICAP REQUIREMENTS:	EQUIPMENT FACILITY IS UNMANNED AND NOT FOR HUMAN HABITATION. HANDICAPPED ACCESS NOT REQUIRED.

PROJECT SUMMARY

ARCHITECT:

TELECOM DESIGN SOLUTIONS, LLC.
7365 MISSION GORGE RD.
SUITE F
SAN DIEGO, CA 92120
CONTACT: FRANK MAGDALENO
PHONE: 619-229-6181

PROJECT TEAM

ZONING		
SITE ACQUISITION		
EAGLE C.M.		
SPRINT RE.		
SPRINT CONST. REP.	SIGNATURE	DATE

SITE DEV'T. SIGN-OFF

SHEET	DESCRIPTION	REV.
T1	TITLE SHEET, SITE INFORMATION AND VICINITY MAP	4
T2	GENERAL NOTES, MATERIAL LISTS, LEGEND, & ABBREVIATIONS	4
A1	SITE PLAN	4
A2	EQUIPMENT AREA PLAN	4
A3	EXTERIOR ELEVATIONS	4
A4	EXTERIOR ELEVATIONS	4
A5	EQUIPMENT ELEVATIONS	4
A6	DETAILS	4
A7	DETAILS	4
S1	STRUCTURAL DETAILS	4
E1	ELECTRICAL SITE PLAN	4
E2	EQUIPMENT GROUNDING & POWER/TELCO PLAN	4
E3	GENERAL NOTES, SINGLE LINE DIAGRAM	4
E4	GROUNDING SCHEDULE & DETAILS	4
E5	ELECTRICAL DETAILS	4
SO-T1	TITLE SHEET - POLE	4
SO-S1	STRUCTURAL DETAILS - POLE	4
SO-S2	FOUNDATION INSTALLATION DRAWINGS - POLE	4
L1	LANDSCAPE PLAN	4
LS1	SITE SURVEY	1

SHEET INDEX

ISSUED FOR: CONSTRUCTION
JURISDICTION: CITY OF SAN DIEGO

DO NOT SCALE DRAWINGS

CONTRACTOR SHALL VERIFY ALL PLANS AND EXISTING DIMENSIONS AND CONDITIONS ON THE JOB SITE AND SHALL IMMEDIATELY NOTIFY THE ARCHITECT IN WRITING OF ANY DISCREPANCIES BEFORE PROCEEDING WITH THE WORK OR BE RESPONSIBLE FOR SAME.

NOT TO SCALE UNLESS PLOTTED AT 24" X 36"

GENERAL CONTRACTOR NOTES

Sprint.
Sprint PCS
2650 CAMINO DEL RIO NORTH, SUITE 100
SAN DIEGO, CA 92108

PROJECT INFORMATION:
FIRE STATION #19
SD34XC521
3434 "B" OCEANVIEW BLVD
SAN DIEGO, 92113
CITY OF SAN DIEGO

CURRENT ISSUE DATE: 12/05/02

ISSUED FOR: CONSTRUCTION

REV.	DATE	DESCRIPTION	BY
3	12/05/02	ISSUED FOR PER CITY COMMENTS	EM
2	11/01/02	ISSUED FOR PRELIM. CITY REVISION	JL
1	10/16/02	ISSUED FOR PRELIM. R.F. REVISION	BC
1	08/30/02	ISSUED FOR PRELIM. CONSTRUCTION	CS
0	08/16/02	ISSUED FOR PRELIM. CONSTRUCTION	AM

PLANS PREPARED BY:
EAGLE TCS
7365 MISSION GORGE RD.
SUITE F
SAN DIEGO, CA 92120
TEL: 619-229-6191

CONSULTANT:

DRAWN BY: EM CHK'D BY: JL APV'D: JJD

LICENSED ARCHITECT
DOUGLAS J. POLLOCK
No. 025509
REN. 12-31-03
STATE OF CALIFORNIA

SHEET TITLE: TITLE SHEET SITE INFORMATION & VICINITY MAP

SHEET NUMBER: T1 REVISION: 4
SD-521

Submitted 12/11/02 EM

EXHIBIT B

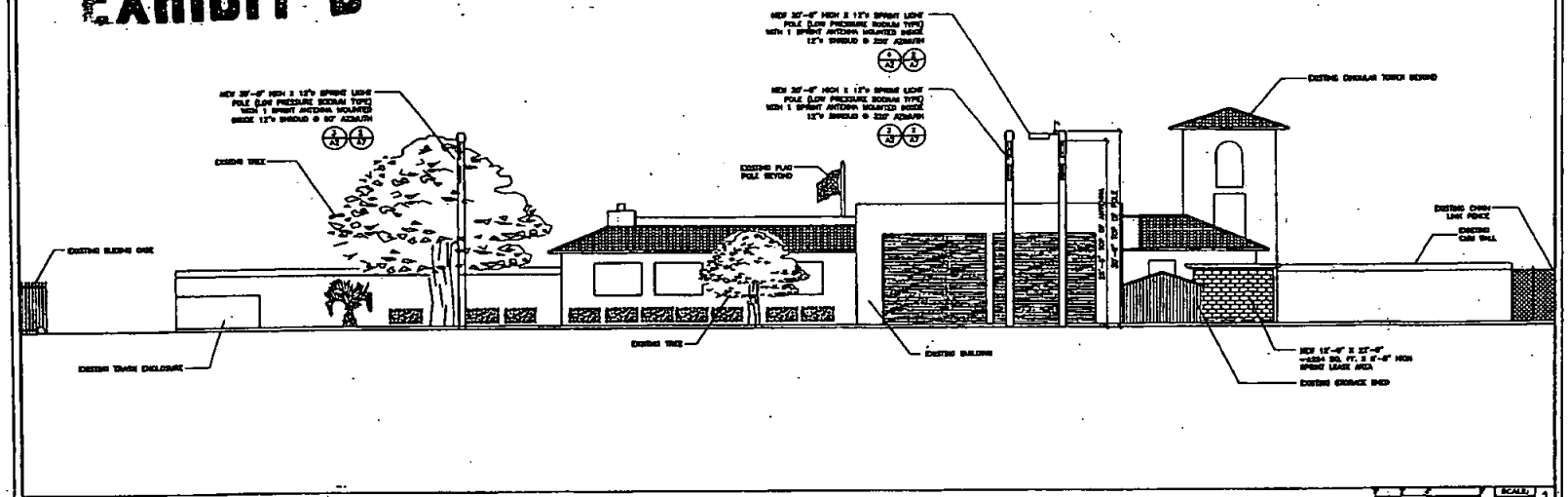

NORTH ELEVATION

SCALE: 1

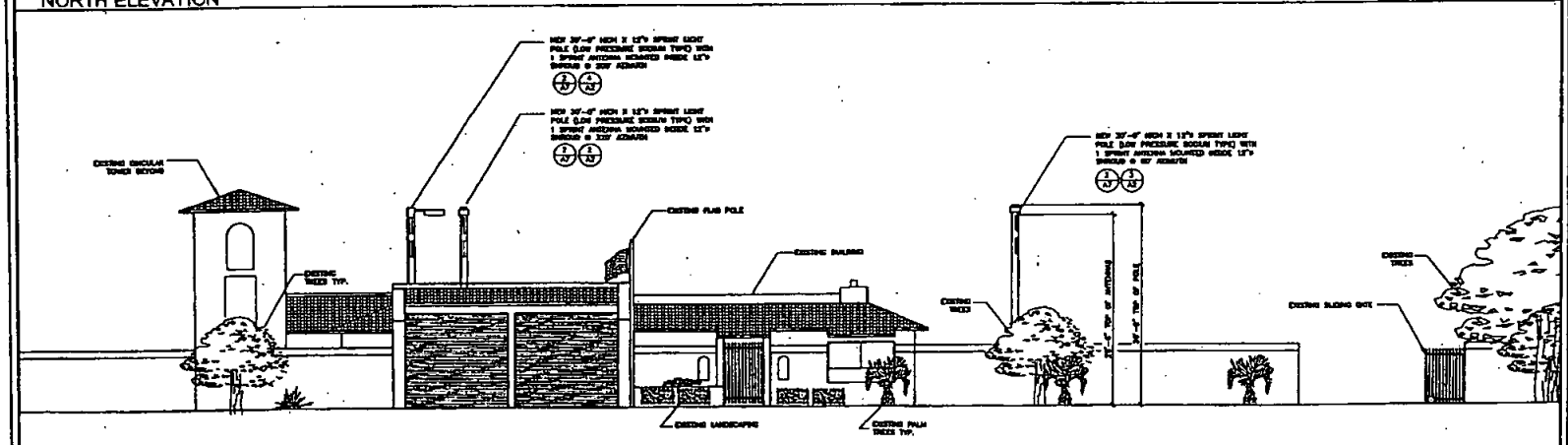

SOUTH ELEVATION

SCALE: 2

Sprint.

Sprint PCS

2650 CAMINO DEL RIO NORTH, SUITE 100
SAN DIEGO, CA 92108

PROJECT INFORMATION:

FIRE STATION #19
SD34XC521
3434 "B" OCEANVIEW BLVD
SAN DIEGO, 92113
CITY OF SAN DIEGO

CURRENT ISSUE DATE:

12/05/02

ISSUED FOR:

CONSTRUCTION

REV.	DATE	DESCRIPTION	BY
4	12/05/02	ISSUED FOR PCR CITY COMMENTS	DJ
3	11/01/02	ISSUED FOR PRELIM. CITY REDESIGN	AL
2	10/16/02	ISSUED FOR PRELIM. C.O. REVISION	BC
1	08/28/02	ISSUED FOR PRELIM. CONSTRUCTION	CS
0	08/16/02	ISSUED FOR PRELIM. CONSTRUCTION	JM

PLANS PREPARED BY:

EAGLE TCS
7345 MISSION GORGE RD.
SUITE F
SAN DIEGO, CA 92120
TEL: 619-229-6191

CONSULTANT:

DRAWN BY:	CHK:	APV.:
DRAWN BY:		JJO

LICENSED ARCHITECT
No. C-5509
REN. 12-31-03
STATE OF CALIFORNIA

SHEET TITLE:

NORTH & SOUTH EXTERIOR ELEVATIONS

SHEET NUMBER: A3

REVISION: 4

SD-521

EXHIBIT B

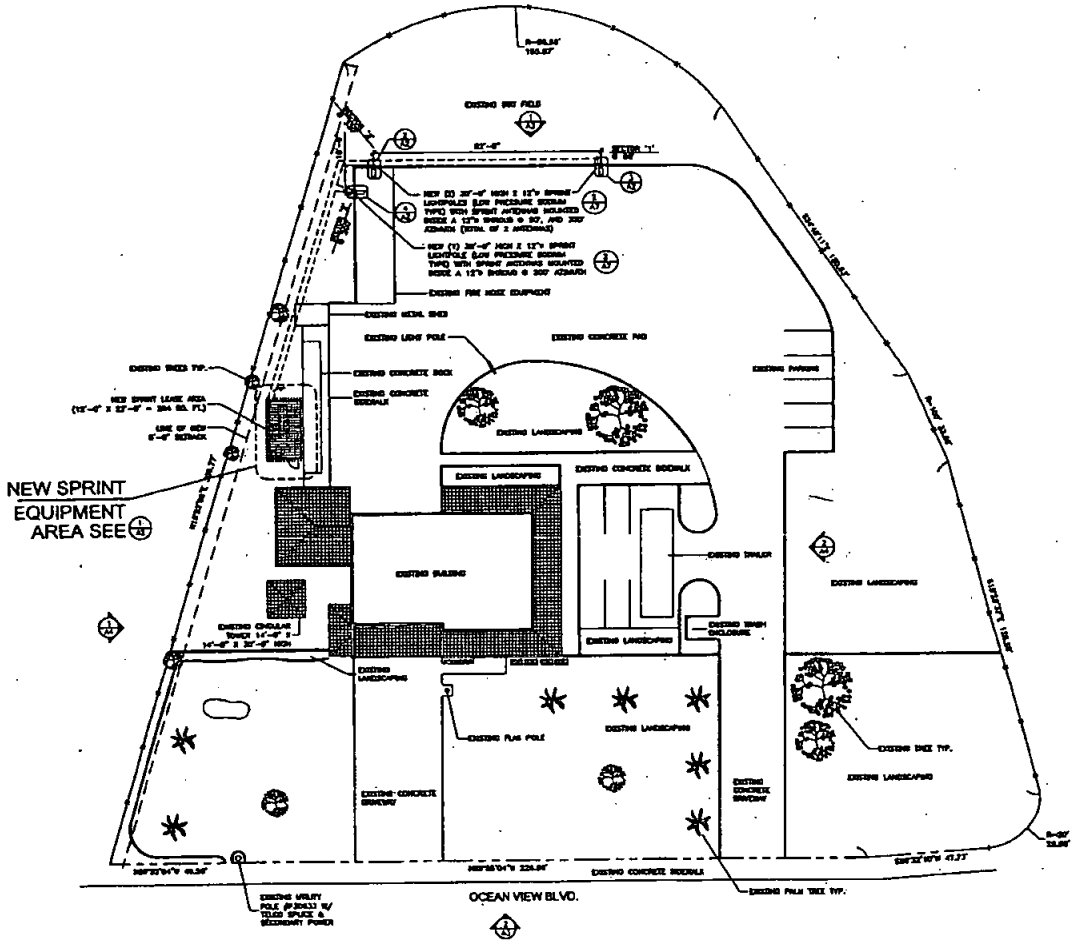

SITE PLAN

Sprint.
Sprint PCS™
2630 CAMINO DEL RIO NORTH, SUITE 100
SAN DIEGO, CA 92108

PROJECT INFORMATION:
FIRE STATION #19
SD34XC521
3434 "B" OCEANVIEW BLVD
SAN DIEGO, 92113
CITY OF SAN DIEGO

CURRENT ISSUE DATE:
12/05/02

ISSUED FOR:
CONSTRUCTION

REV.	DATE	DESCRIPTION	BY
4	12/05/02	ISSUED FOR PER CITY COMMENTS	EM
3	11/01/02	ISSUED FOR PRELIM. CD'S REVIEW	AL
2	10/10/02	ISSUED FOR PRELIM. C.D. REVIEW	SC
1	08/30/02	ISSUED FOR FINAL CONSTRUCTION	CS
0	08/10/02	ISSUED FOR PRELIM. CONSTRUCTION	JH

PLANS PREPARED BY:
EAGLE TCS
7365 MISSION GORGE RD.
SUITE F
SAN DIEGO, CA 92120
TEL: 619-229-6191

CONSULTANT:

DRAWN BY:	CHK.	APV.
DRAWN BY: DAMIAN		JJO

LICENSED ARCHITECT
LICENSED ARCHITECT MARK VIGURI No. C25509 REN. 12-31-03 STATE OF CALIFORNIA

SHEET TITLE:
SITE PLAN

SHEET NUMBER: A1
REVISION: 4
SD-521

EXHIBIT B

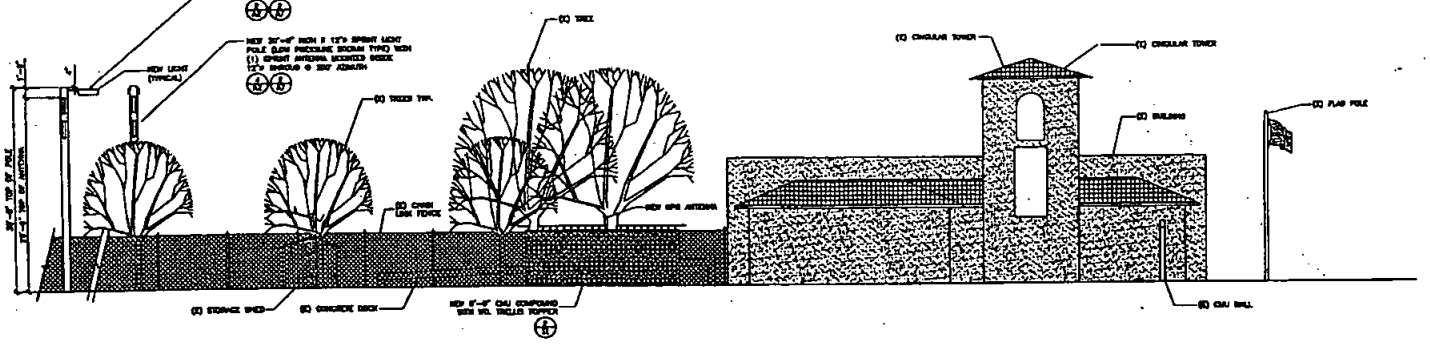

WEST ELEVATION

SCALE: 1/8"=1'-0" 1

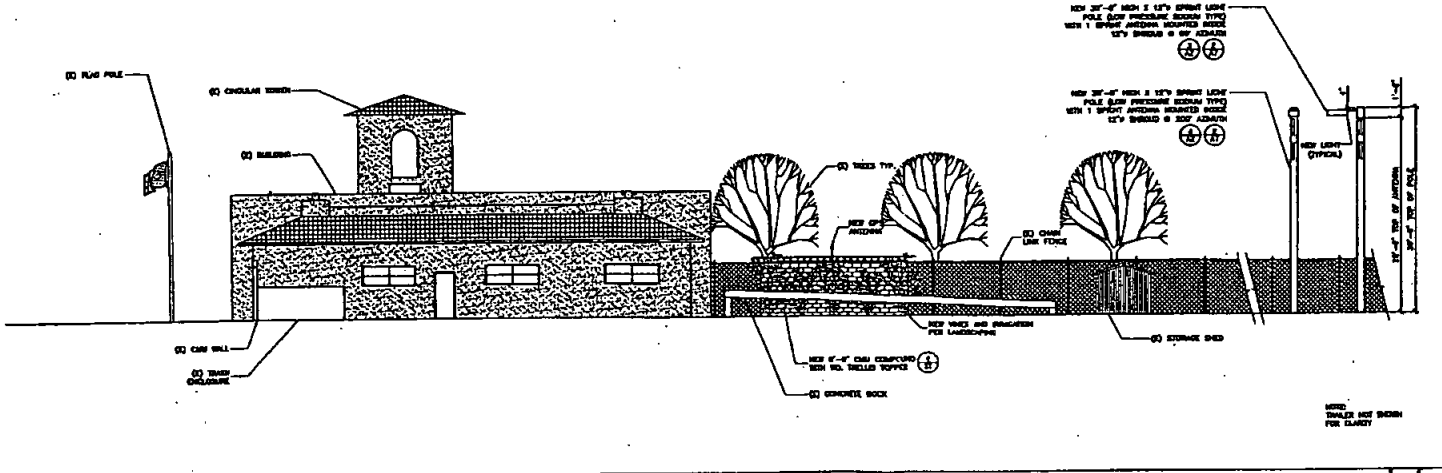

EAST ELEVATION

SCALE: 1/8"=1'-0" 2

Sprint.
Sprint PCS™
2650 CAMINO DEL RIO NORTH, SUITE 100
SAN DIEGO, CA 92108

PROJECT INFORMATION:
FIRE STATION #19
SD34XC521
3434 "B" OCEANVIEW BLVD
SAN DIEGO, 92113
CITY OF SAN DIEGO

CURRENT ISSUE DATE:
12/05/02

ISSUED FOR:
CONSTRUCTION

REV.	DATE	DESCRIPTION	BY
4	12/05/02	ISSUED FOR PCS CITY COMMENTS	CH
3	11/01/02	ISSUED FOR PRELIM. CD'S REDESIGN	AL
2	10/10/02	ISSUED FOR PRELIM. C.D. REVISION	EC
1	08/20/02	ISSUED FOR PRELIM. CONSTRUCTION	CS
0	06/10/02	ISSUED FOR PRELIM. CONSTRUCTION	AM

PLANS PREPARED BY:
EAGLE TCS
7345 MISSION GORGE RD.
SUITE F
SAN DIEGO, CA 92120
TEL: 619-229-6191

CONSULTANT:

DRAWN BY: AMC APV: JJO

LICENSED ARCHITECT
No. C26508
REN. 12-31-03
STATE OF CALIFORNIA

SHEET TITLE:
WEST & EAST EXTERIOR ELEVATION

SHEET NUMBER: A4
REVISION: 4
SD-521

EXHIBIT C

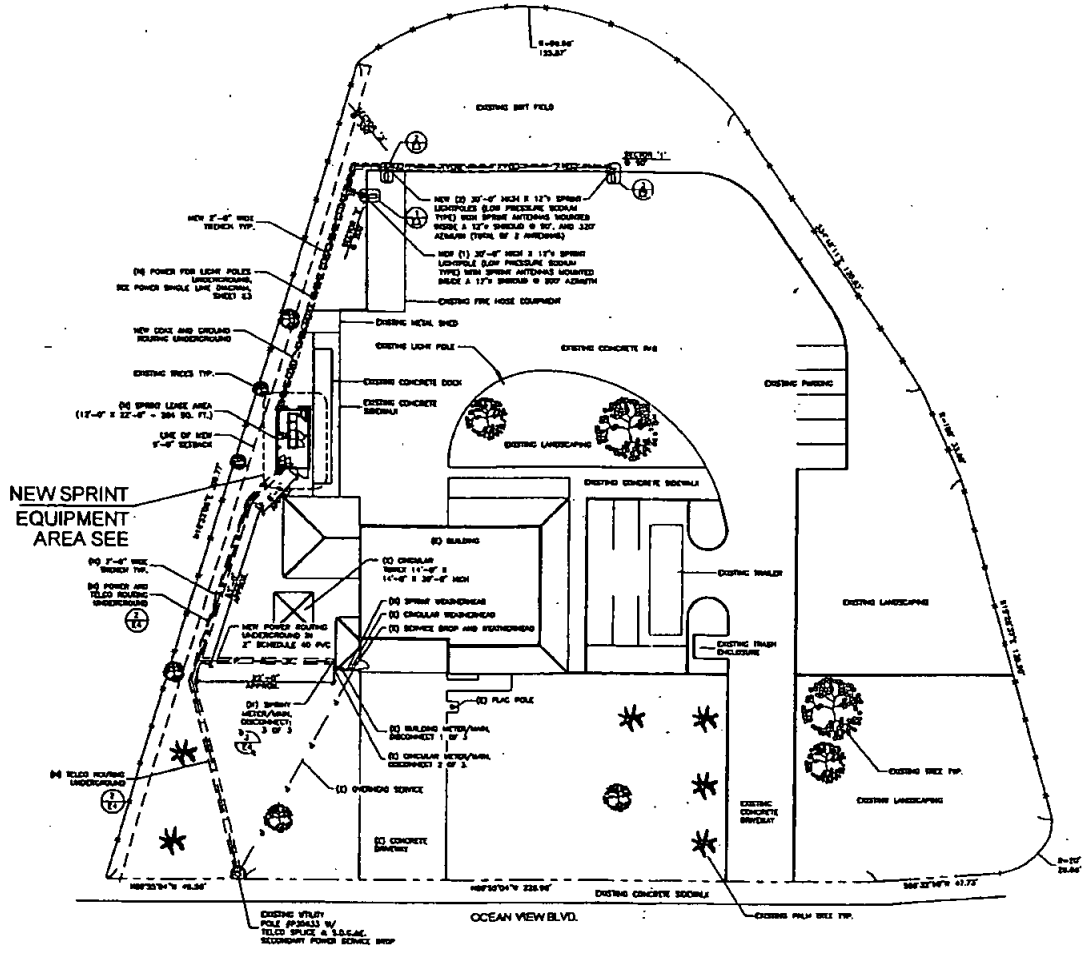

SITE PLAN – POWER AND TELCO RUNS

Sprint.
Sprint PCS™
2650 CAMINO DEL RIO NORTH, SUITE 100
SAN DIEGO, CA 92108

PROJECT INFORMATION:

FIRE STATION #19
SD34XC521
3434 "S" OCEANVIEW BLVD
SAN DIEGO, 92113
CITY OF SAN DIEGO

CURRENT ISSUE DATE:
11/26/02

ISSUED FOR:
CONSTRUCTION

REV.	DATE	DESCRIPTION	BY
5	11/26/02	ISSUED FOR CITY COMMENTS	CS
4	11/22/02	ISSUED FOR FINAL REDESIGN	CS
3	11/01/02	ISSUED FOR PRELIM. CITY'S REDESIGN	AL
2	10/10/02	ISSUED FOR FINAL C.D. REVISION	BK
1	06/20/02	ISSUED FOR FINAL CONSTRUCTION	CS
0	06/10/02	ISSUED FOR PRELIM. CONSTRUCTION	JM

PLANS PREPARED BY:

EAGLE TCS
7365 MISSION GORGE RD.
SUITE F
SAN DIEGO, CA 92120
[illegible]

CONSULTANT:

REGISTERED PROFESSIONAL ENGINEER
WALTER U. CAMP
NO. 7061
EXP 9/06
ELECTRICAL
STATE OF CALIFORNIA

DRAWN BY: DRAWN BY JJO / REVIEW JJO

LICENSURE:
12/11/2

SHEET TITLE:
SITE PLAN
POWER AND TELCO
RUNS

SHEET NUMBER: E1
REVISION: 5
SD-521

EXHIBIT C

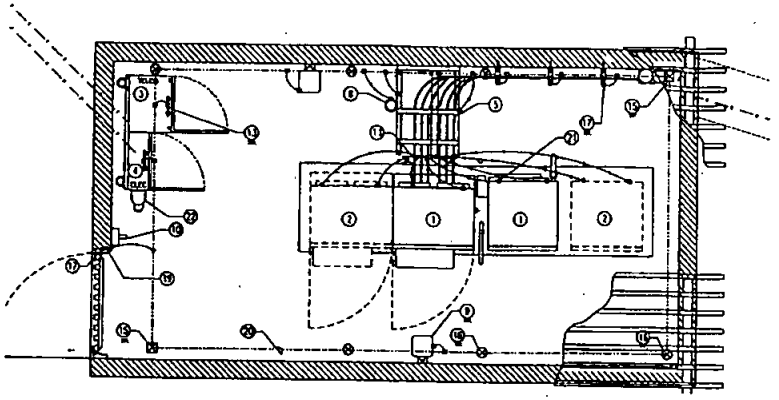

EQUIPMENT GROUNDING PLAN

SCALE: 1/8"=1'-0" 1

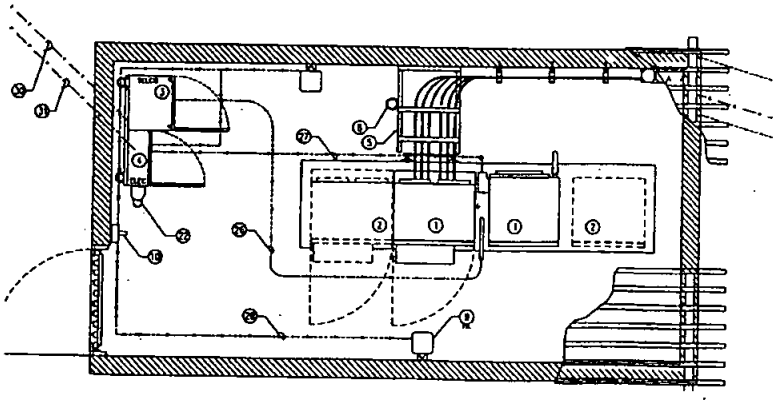

POWER AND TELCO PLAN

SCALE: 1/8"=1'-0" 2

REFERENCE NOTES:

1. (N) SPRINT EQUIPMENT CABINET.
2. FUTURE SPRINT EQUIPMENT CABINET.
3. (N) TELCO CABINET.
4. (N) "PPC" CABINET, PANEL "PP" INSIDE "PPC" CABINET.
5. COAX CABLE SUPPORT.
6. NOT USED
7. NOT USED
8. (N) GPS ANTENNA.
9. (N) LIGHTING FIXTURE (TYP).
10. (N) SERVICE LIGHT SWITCH
11. (N) 24"x4"x1/4" TINNED GROUND BAR
12. (N) 12"x4"x1/4" TINNED GROUND BAR B/. BUS
13. (N) 6"x4"x1/4" TINNED GROUND BAR
14. NOT USED
15. (N) 10'x5/8" COPPER CLAD GROUND ROD W/ 10"x12" ACCESS. (10' MAX SEPARATION).
16. (N) 10'x5/8" COPPER CLAD GROUND ROD. (10' MAX SEPARATION).
17. CADWELD CONNECTION, TYP
18. NOT USED
19. #4 AWG GATE JUMPER
20. BARE TINNED COPPER WIRE
21. 2-HOLE LONG BARREL LUG GROUND CONNECTION TO EQUIPMENT.
22. (N) APPLEON MOUNTED TO CMU WALL
23. GROUND CONNECTION TO LIGHTING ROD
24. (N) LUG CONNECTION, TYP.
25. SEE ELECTRICAL 1-LINE DIAGRAM.
26. (1) 2" CONDUIT FOR TELCO.
27. (1) 2" CONDUIT FOR ELEC.
28. (1) 1" CONDUIT FOR LIGHTING.
29. NOT USED
30. SDG&E IS THE SERVICE PROVIDER. SERVICE IS ANTICIPATED TO BE PULLED FROM EXISTING WEATHERHEAD AS SHOWN. SERVICE SHALL WIRE OUT OF EXISTING WEATHERHEAD TO A PROPOSED NEW WEATHERHEAD. CONDUIT DOWN APPROX. 1' PUNCH THROUGH ROOF INTO BLDG., RUN DOWN APPROX. 4' TURN 90' NORTHWEST AND RUN APPROX. 4', PUNCH OUT TO EXTERIOR WEST WALL OF BLDG., TURN 90' DOWN AND APPROX. 4' TO A PROPOSED SPRINT METER PANEL. CONTINUE DOWN APPROX. 7', TURN 90' WEST INTO A POWER TRENCH AND RUN APPROX. 22', TURN 90' NORTH JOIN, WITH TELCO TRENCH AND CONTINUE APPROX. 83', TURN 45' NORHTEAST AND RUN APPROX. 8', TURN 90' UP AND RUN APPROX. 4' TO PPC. CONDUIT SHALL BE 3" SCHEDULE 40 PVC AND 2" EMT. 200 AMP SINGLE PHASE SERVICE IS REQUESTED. 1 PULL BOX IS ANTICIPATED AT THIS TIME. TOTAL SERVICE RUN ESTIMATED AT 117'.
31. PACIFIC BELL IS THE SERVICE PROVIDER. SERVICE OS ANTICIPATED TO BE PULLED FROM EXISTING TELCO SPLICE ON UTILITY POLE #P30833 AS SHOWN. SERVICE SHALL CONDUIT DOWN, TURN 90' INTO A TELCO TRENCH, RUN NORHTWEST APPROX. 77', TURN 45' NORTH, JOIN WITH POWER TRENCH AND CONTINUE APPROX. 63', TURN 45' NORTHEAST AND RUN APPROX. 8', TURN 90' UP AND RUN APPROX. 4' TO PPC. A 66 BLOCK. (33 PAIR) IS REQUIRED AT PPC. CONDUIT SHALL BE 4" SCHEDULE 40 PVC. NO PULL BOXES ARE ANTICIPATED AT THIS TIME.

PLAN LEGEND

- 30"x12" MANHOLE TEST WELD
- GROUND ROD
- CAD WELD
- STUB-UP
- GROUND
- TELCO
- POWER
- LUG

Sprint.
Sprint PCS™
2650 CAMINO DEL RIO NORTH, SUITE 100
SAN DIEGO, CA 92108

PROJECT INFORMATION:

FIRE STATION #19
SD34XC521
3434 "B" OCEANVIEW BLVD
SAN DIEGO, 92113
CITY OF SAN DIEGO

CURRENT ISSUE DATE:
11/26/02

ISSUED FOR:
CONSTRUCTION

REV.	DATE	DESCRIPTION	BY
3	11/26/02	ISSUED FOR CITY COMMENTS	CS
2	11/25/02	ISSUED FOR FINAL REVISION	CS
1	11/21/02	ISSUED FOR PRELIM. CD'S REVISION	AL
0	10/10/02	ISSUED FOR FINAL C.D. REVISION	BC
1	08/28/02	ISSUED FOR FINAL CONSTRUCTION	CS
0	08/18/02	ISSUED FOR PRELIM. CONSTRUCTION	AV

PLANS PREPARED BY:

EAGLE TCS
7365 MISSION GORGE RD.
SUITE F
SAN DIEGO, CA 92120
TEL: 619-229-6191

REGISTERED PROFESSIONAL ENGINEER
WALTER O. CAMP
NO. 7061
Exp 9/06
ELECTRICAL
STATE OF CALIFORNIA

DRAWN BY: RTV
CHECKED BY: JJO

LICENSURE:
12/11/2

SHEET TITLE:
EQUIPMENT GROUNDING, POWER AND TELCO PLAN

SHEET NUMBER: E2
REVISION: 5
SD-521

EXHIBIT C

1. ALL DETAILS ARE SHOWN IN GENERAL TERMS. ACTUAL GROUNDING INSTALLATION REQUIREMENTS AND CONSTRUCTION ACCORDING TO SITE CONDITIONS.
2. ALL GROUNDING CONDUCTORS: #2/0 AWG STRANDED BARE TINNED COPPER WIRE UNLESS OTHERWISE NOTED.
3. GROUND BAR LOCATED IN BASE OF EQUIPMENT WALL BE PROVIDED, FURNISHED AND INSTALLED BY THE VENDOR.
4. ALL BELOW GRADE CONNECTIONS: EXOTHERMIC WELD TYPE. ABOVE GRADE CONNECTIONS: EXOTHERMIC WELD TYPE.
5. GROUND RING SHALL BE LOCATED A MINIMUM OF 30" BELOW GRADE OR 6" MINIMUM BELOW THE FROST LINE, WHICH EVER IS DEEPER.
6. INSTALL GROUND CONDUCTORS AND GROUND ROD MINIMUM OF 1'-6" FROM EQUIPMENT CONCRETE SLAB, SPREAD FOOTING, OR FENCE.
7. EXOTHERMIC WELD GROUND CONNECTION TO FENCE POST: TREAT WITH A COLD GALVANIZED SPRAY.
8. GROUND BARS:
   A. EQUIPMENT GROUND BUS BAR (EGB) LOCATED AT BOTTOM OF ANTENNA POLE/MAST FOR MAKING EXOTHERMIC JUMPER CONNECTIONS TO COAX FEEDER CABLES SHALL BE FURNISHED AND INSTALLED BY ELECTRICAL CONTRACTOR. JUMPERS (FURNISHED BY OWNER) SHALL BE INSTALLED AND CONNECTED BY ELECTRICAL CONTRACTOR.
   B. MAIN GROUND BUS BAR (MGB) LOCATED NEAR THE BASE OF THE RADIO EQUIPMENT CABINET(S) SHALL BE FURNISHED AND INSTALLED BY ELECTRICAL CONTRACTOR.
9. ALL GROUNDING INSTALLATIONS AND CONNECTIONS SHALL BE MADE BY ELECTRICAL CONTRACTOR.
10. DESIGNS N.E.C. AND LOCAL UTILITY REQUIREMENTS FOR ELECTRICAL SERVICE GROUNDING.
11. GROUNDING ATTACHMENT TO TOWER SHALL BE AS PER MANUFACTURER'S RECOMMENDATIONS OR AT GROUNDING POINTS PROVIDED (2 MINIMUM).

GROUNDING NOTES

SCALE: NTS | 6

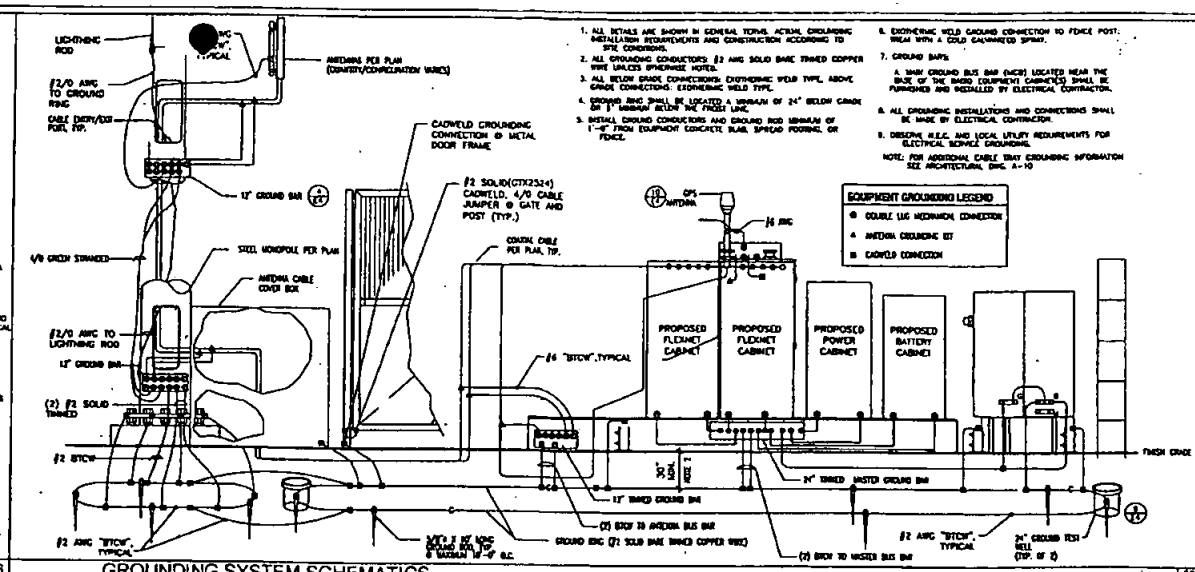

1. ALL DETAILS ARE SHOWN IN GENERAL TERMS. ACTUAL GROUNDING INSTALLATION REQUIREMENTS AND CONSTRUCTION ACCORDING TO SITE CONDITIONS.
2. ALL GROUNDING CONDUCTORS: #2 AWG SOLID BARE TINNED COPPER WIRE UNLESS OTHERWISE NOTED.
3. ALL BELOW GRADE CONNECTIONS: EXOTHERMIC WELD TYPE. ABOVE GRADE CONNECTIONS: EXOTHERMIC WELD TYPE.
4. GROUND RING SHALL BE LOCATED A MINIMUM OF 24" BELOW GRADE OR 6" MINIMUM BELOW THE FROST LINE.
5. INSTALL GROUND CONDUCTORS AND GROUND ROD MINIMUM OF 1'-6" FROM EQUIPMENT CONCRETE SLAB, SPREAD FOOTING, OR FENCE.
6. EXOTHERMIC WELD GROUND CONNECTION TO FENCE POST: TREAT WITH A COLD GALVANIZED SPRAY.
7. GROUND BARS:
   A. MAIN GROUND BUS BAR (MGB) LOCATED NEAR THE BASE OF THE RADIO EQUIPMENT CABINET(S) SHALL BE FURNISHED AND INSTALLED BY ELECTRICAL CONTRACTOR.
8. ALL GROUNDING INSTALLATIONS AND CONNECTIONS SHALL BE MADE BY ELECTRICAL CONTRACTOR.
9. DESIGNS N.E.C. AND LOCAL UTILITY REQUIREMENTS FOR ELECTRICAL SERVICE GROUNDING.

NOTE: FOR ADDITIONAL CABLE TRAY GROUNDING INFORMATION SEE ARCHITECTURAL DWG. A-10

EQUIPMENT GROUNDING LEGEND

- ⊕ DOUBLE LUG MECHANICAL CONNECTION
- A ANTENNA GROUNDING KIT
- B CADWELD CONNECTION

GROUNDING SYSTEM SCHEMATICS

SCALE: NTS | 1

PANEL "PP"-120/240V 1φ 3W (INSIDE PPC CAB.)
42 KJMC SERIES RATED WITH TRANSFER SWITCH 200 AMPS CIRCUIT BREAKERS

DESCRIPTION	PC	NO.	WIRE	L1	L2	WIRE	NO.	PC	DESCRIPTION
Panelboard 24 Power Cabinet Circuit No. 1		1	#2/0	8750		#2/0	2		SURGE SUPPRESSOR (INTERNAL) (INTERNALLY PROTECTED)
		3	#2/0		#2/0	#2/0	4		
Panelboard 24 Power Cabinet Circuit No. 1		5	#2/0	8750		#2/0	6		Panelboard 24 Power Cabinet Circuit No. 2
		7	#2/0		8750	#2/0	8		
POLE LIGHTS (EXISTING)		9	#6/0	7200		#6/0	10		GFCI RECEPTACLE (INTERNAL)
SPARE (INTERNAL)		11	#6		7200	#6/0	12		SPARE LOADS (U.O.)
LOAD PHASE				15950	15950	CON. of LCL = 80%			
TOTAL CONNECTED LOAD + 25%LCL = 32KVA/.240 = 134A									

PANEL SCHEDULE

SCALE: NTS | 7

1. UTILITY POINTS OF SERVICE AND WORK / MATERIALS SHOWN ARE BASED UPON PRELIMINARY INFORMATION PROVIDED BY THE UTILITY COMPANIES AND ARE FOR BID PURPOSES ONLY.
2. CONTRACTOR SHALL COORDINATE WITH UTILITY COMPANY FOR FINAL AND EXACT WORK / MATERIALS REQUIREMENTS AND CONSTRUCT TO UTILITY COMPANY ENGINEERING PLANS AND SPECIFICATIONS ONLY. CONTRACTOR SHALL FURNISH AND INSTALL ALL CONDUIT, PULL ROPES, CABLES, PULL BOXES, CONCRETE ENCASEMENT OF CONDUIT (IF REQUIRED), TRANSFORMER PAD, BARRIERS, POLE PEDES, TRENCHING, BACKFILL, PAY ALL UTILITY COMPANY FEES AND INCLUDE ALL REQUIREMENTS IN SCOPE OF WORK.
3. UTILITY CONTACTS FOR THIS PROJECT SHALL BE AS FOLLOWS:

POWER: POWER_COMPANY	TELEPHONE: TELCO
CONTACT	CONTACT
ADDRESS	ADDRESS
CITY_STATE_ZIP	CITY_STATE_ZIP
TELEPHONE_NUMBER	PHONE_NUMBER

UTILIY GENERAL NOTES

SCALE: NTS | 4

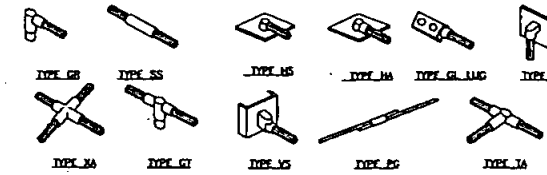

CADWELD CONNECTIONS

SCALE: NTS | 2

ELECTRICAL SYMBOLS

- GROUND ROD WITH ACCESS
- GROUND ROD
- GROUND ROD
- DISCONNECT SWITCH
- UTILITY METER
- CIRCUIT BREAKER
- FUSE
- DUPLEX RECEPTACLE
- DUPLEX RECEPTACLE WITH GFCI IN WEATHERPROOF ENCLOSURE
- SWITCH, 120VAC, 20A
  - SW = SWITCH LTS
  - M = MANUAL MOTOR STARTER
- EXTERIOR POLE LIGHTS, LIGHTS TO COMPLY WITH CALIFORNIA OUTDOOR LIGHTING REGULATIONS
- CLAMP OR DOUBLE HOLE LUG TYPE GROUND CONNECTION
- EXOTHERMIC CONNECTION (CADWELD) TO GROUND RING AND COMPRESSION CONNECTION TO GROUND RING
- GENERATOR
- GROUNDING WIRE, DASHED LINE INDICATES UNDERGROUND
- POWER LINE, DASHED INDICATES UNDERGROUND, 3/4"C-2#12&1#12GND, UNO
- TELEPHONE LINE, DASHED LINE INDICATES UNDERGROUND
- COAXIAL CABLE, DASHED LINE INDICATES UNDERGROUND
- DETAIL REFERENCE DETAIL NO. 2 ON SHEET E3
- CIRCUIT BREAKER

ABBREVIATIONS

AWG	AMERICAN WIRE GAUGE	GR	GROWTH
ACCA	ANTENNA CABLE COVER ASSEMBLY	IGB	INTERIOR GROUND RING (MALD)
BTCW	BARE TINNED COPPER WIRE	IAIC	INDUCTANCE AMPS INTERRUPTING CAPACITY
BTS	BASE TRANSMISSION SYSTEM	MGB	MASTER ISOLATED GROUND BAR
C	CONDUIT	(N)	NEW (PROVIDE AND INSTALL)
CIGBE	COAX ISOLATED GROUND BAR EXTERNAL		UNLESS NOTED OTHERWISE
CB	CIRCUIT BREAKER	PCS	PERSONAL COMMUNICATION SERVICE
CO	CONDUIT ONLY	PPC	POWER PROTECTION CABINET
DWG	DRAWING	PRC	PRIMARY RADIO CABINET
EMT	ELECTRICAL METALLIC TUBING	PVC	POLYVINYL CHLORIDE CONDUIT
(E) OR EX.	EXISTING	RGS	RIGID GALVANIZED STEEL
GEN	GENERATOR	RWY	RACEWAY
GFI	GROUND FAULT CIRCUIT INTERRUPTER	S.L.D.	SINGLE LINE DIAGRAM
GND	GROUND	SSLP	SPRINT SPECTRUM LIMITED PARTNERSHIP
GPS	GEOSTATIONARY POSITIONING SYSTEM	TEL	TELEPHONE
		TYP.	TYPICAL
		UNO	UNLESS NOTED OTHERWISE
		WP	WEATHERPROOF EQUIPMENT

SYMBOLS AND ABBREVIATIONS

SCALE: NTS | 8

NOT USED

SCALE: NTS | 5

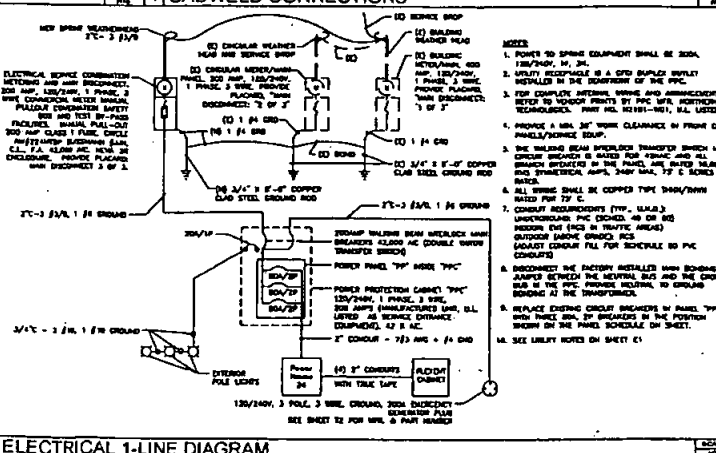

NOTES

1. POWER TO SPRINT EQUIPMENT SHALL BE 200A, 120/240V, 1Φ, 3W.
2. UTILITY RECEPTACLE IS A GFCI DUPLEX OUTLET INSTALLED IN THE BOUNDARY OF THE PPC.
3. FOR COMPLETE ANTENNA WIRING AND ARRANGEMENTS REFER TO VENDOR PRINTS BY PPC MFR. NORTHSTAR TECHNOLOGIES. PART NO. N21191-N01, N.L. LISTED.
4. PROVIDE A MIN. 36" WORK CLEARANCE IN FRONT OF PANELS/SERVICE EQUIP.
5. THE TRANSFER SWITCH INTERLOCK TRANSFER SWITCH MAIN CIRCUIT BREAKER IS RATED FOR 42KAIC AND ALL BRANCH BREAKERS IN THE PANEL ARE RATED 10,000 AIC SYMMETRICAL AMPS, 240V MAX, 75° C. NONES RATED.
6. ALL WIRING SHALL BE COPPER TYPE THWN/THWN RATED FOR 75° C.
7. CONDUIT REQUIREMENTS (TYP., U.N.O.): UNDERGROUND: PVC SCH40, 40 OR 80 INDOOR EMT (RGS IN TRAFFIC AREAS) OUTDOOR (ABOVE GRADE): RGS (ADJUST CONDUIT FILL FOR SCHEDULE 80 PVC CONDUITS)
8. DISCONNECT THE FACTORY INSTALLED MAIN BONDING JUMPER BETWEEN THE NEUTRAL BUS AND THE GROUND BUS IN THE PPC. PROVIDE NEUTRAL TO GROUND BONDING AT THE TRANSFORMER.
9. REPLACE EXISTING CIRCUIT BREAKERS IN PANEL "PP" WITH THREE 20A, 1P BREAKERS IN THE POSITION SHOWN ON THE PANEL SCHEDULE ON SHEET.

NL. SEE UTILITY NOTES ON SHEET E1

ELECTRICAL 1-LINE DIAGRAM

SCALE: NTS | 3

Sprint.
Sprint PCS™
2650 CAMINO DEL RIO NORTH, SUITE 100
SAN DIEGO, CA 92108

PROJECT INFORMATION:

FIRE STATION #19
SD34XC521
3434 "B" OCEANVIEW BLVD
SAN DIEGO, 92113
CITY OF SAN DIEGO

CURRENT ISSUE DATE: 11/26/02

ISSUED FOR: CONSTRUCTION

REV.	DATE	DESCRIPTION	BY
1	11/26/02	ISSUED FOR CITY COMMENTS	ES
2	11/25/02	ISSUED FOR FINAL REVIEW	ES
3	11/01/02	ISSUED FOR PRELIM. CD'S REVIEW	AL
4	10/14/02	ISSUED FOR FINAL C.D. REVISION	BC
5	08/29/02	ISSUED FOR FINAL CONSTRUCTION	ES
6	08/16/02	ISSUED FOR PRELIM. CONSTRUCTION	JM

PLANS PREPARED BY:

EAGLE TCS
7345 MISSION GORGE RD.
SUITE F
SAN DIEGO, CA 92120
(619) 528-6191

CONSULTANT:

REGISTERED PROFESSIONAL ENGINEER
WALTER B. CAMP
NO. 7061
EXP 9/06
ELECTRICAL
STATE OF CALIFORNIA

DRAWN BY: JM | CHK'D: BCV | APP'D: JAO

LICENSURE: 12/11/2

SHEET TITLE:

GENERAL NOTES AND SINGLE LINE DIAGRAM

SHEET NUMBER: E3 | REVISION: 5

SD-521

EXHIBIT C

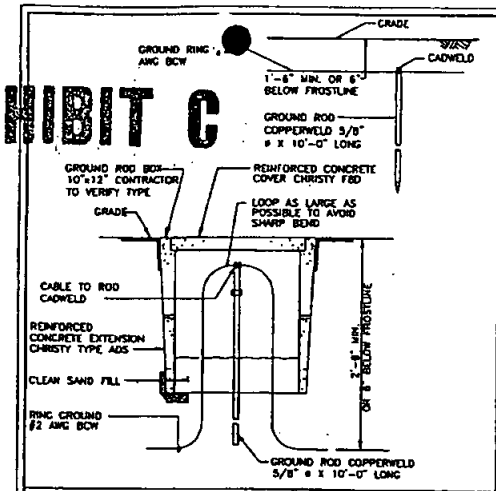

GROUND ROD W/ ACCESS — SCALE: NONE — 9

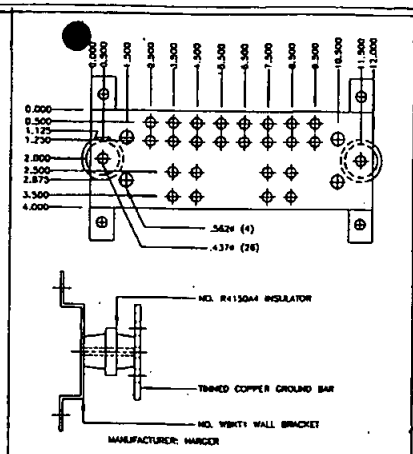

GROUND BAR ASSEMBLY (12") — SCALE: NONE — 6

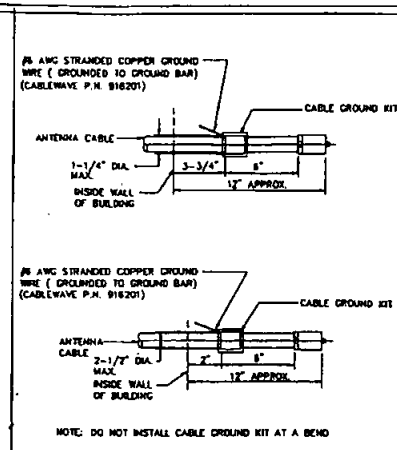

ANTENNA CABLE GROUND KIT — SCALE: NONE — 4

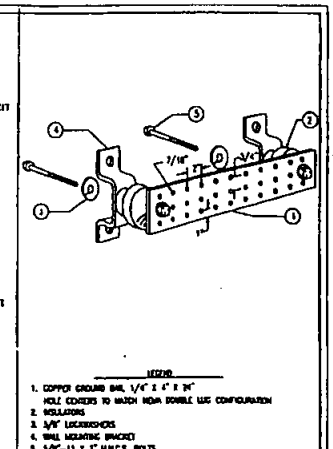

GROUND BAR DETAIL — SCALE: NONE — 1

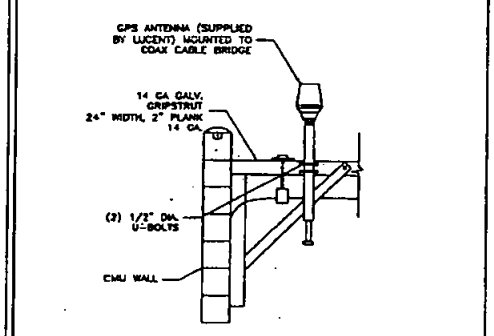

GPS ANTENNA — SCALE: NONE — 10

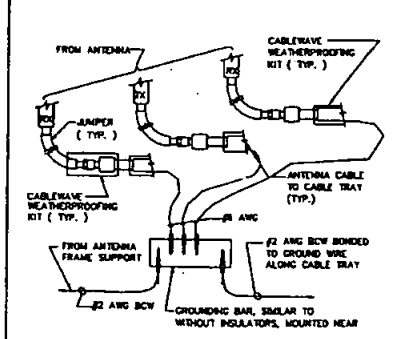

ANTENNA CABLE GROUND — SCALE: NONE — 7

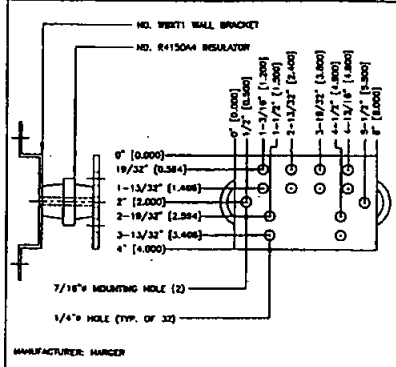

GROUND BAR ASSEMBLY (6") — SCALE: NONE — 5

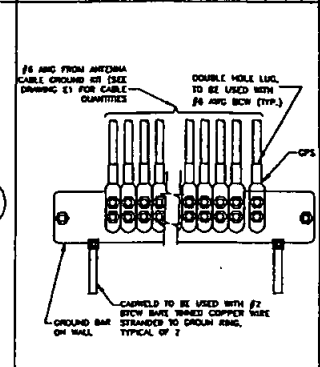

MAIN ANTENNA GROUND BAR — SCALE: NONE — 2

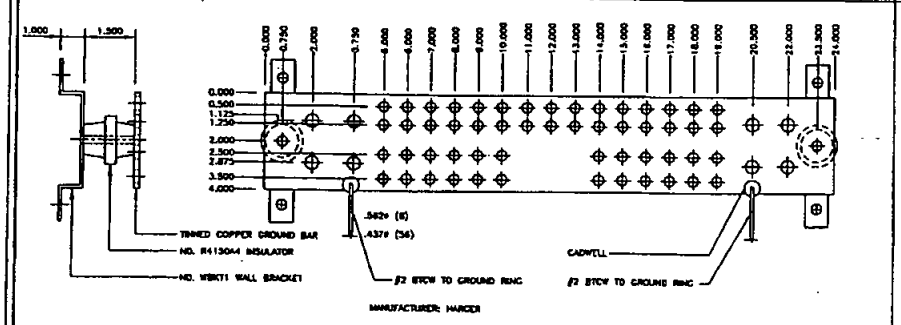

GROUND BAR ASSEMBLY (24") — SCALE: NONE — 8

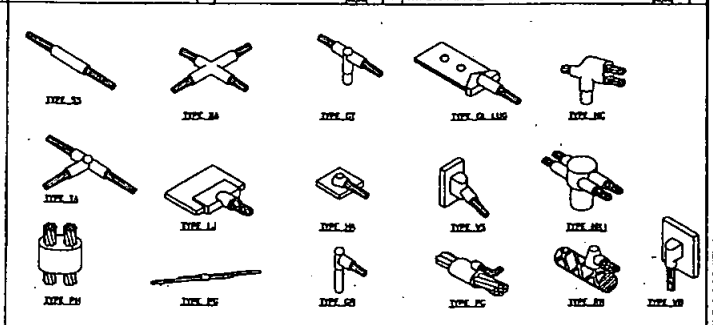

CADWELD CONNECTION DEATILS — SCALE: NONE — 3

Sprint.
Sprint PCS™
2650 CAMINO DEL RIO NORTH, SUITE 100
SAN DIEGO, CA 92108

PROJECT INFORMATION:

FIRE STATION #19
SD34XC521
3434 "B" OCEANVIEW BLVD
SAN DIEGO, 92113
CITY OF SAN DIEGO

CURRENT ISSUE DATE: 11/26/02

ISSUED FOR: CONSTRUCTION

REV.:	DATE:	DESCRIPTION:	BY:
4	11/26/02	ISSUED FOR CITY COMMENTS	CS
3	11/25/02	ISSUED FOR FINAL REDESIGN	CS
2	11/01/02	ISSUED FOR PRELIM. CO'S REDESIGN	AL
1	10/10/02	ISSUED FOR FINAL C.D. REVISION	BC
0	09/26/02	ISSUED FOR FINAL CONSTRUCTION	CS
A	06/10/02	ISSUED FOR PRELIM. CONSTRUCTION	JM

PLANS PREPARED BY:

EAGLE TCS
7343 MISSION GORGE RD.
SUITE F
SAN DIEGO, CA 92120
TEL: 619-225-6191

CONSULTANT:

REGISTERED PROFESSIONAL ENGINEER — WALTER G. SCHAMP — NO. 7061 — EXP 9/06 — ELECTRICAL — STATE OF CALIFORNIA

DRAWN BY: DRAWN BY: JJO

LICENSURE: 12/11/2

SHEET TITLE: ELECTRICAL DETAILS

SHEET NUMBER: E4 — REVISION: 5

SD-521

EXHIBIT C

NOT USED

SCALE: N.T.S. | 5

GENERAL NOTES

SCALE: N.T.S. | 6

A. ALL WORKS AND MATERIALS SHALL BE IN FULL ACCORDANCE WITH THE LATEST RULES AND REGULATIONS OF THE CALIFORNIA ADMINISTRATIVE CODE, PART III, "BASIC ELECTRICAL REGULATIONS", THE NATIONAL ELECTRICAL CODE (EDITION ENFORCED BY LOCAL AUTHORITY), AND ALL APPLICABLE STATE AND LOCAL LAWS AND REGULATIONS. NOTHING IN THESE PLANS OR SPECIFICATIONS SHALL BE CONSTRUCTED AS TO/PERMIT WORK NOT CONFORMING TO THE MOST STRINGENT OF THESE CODES. SHOULD CHANGES BE NECESSARY IN THE DRAWINGS OR THE SPECIFICATIONS TO MAKE THE WORK COMPLY WITH THESE REQUIREMENTS, THE CONTRACTOR SHALL IMMEDIATELY (SPECIALLY BEFORE BIDDING SUBMITTAL) NOTIFY THE ENGINEER IN WRITING AND CEASE WORK ON PARTS OF THE CONTRACT WHICH ARE AFFECTED.

B. THE CONTRACTOR SHALL MAKE A SITE VISITATION PRIOR TO BIDDING AND CONSTRUCTION TO VERIFY ALL EXISTING CONDITIONS AND SHALL TO NOTIFY THE ENGINEER IMMEDIATELY UPON DISCOVERY OF ANY DISCREPANCIES. THE CONTRACTOR ASSUMES ALL LIABILITY FOR FAILURE TO COMPLY WITH THIS PROVISION.

C. THE EXTENT OF THE WORK IS INDICATED BY THE DRAWINGS, SCHEDULES, AND THIS SPECIFICATION AND IS SUBJECT TO THE TERMS AND CONDITIONS OF THE CONTACT. THE WORK SHALL CONSIST OF FURNISHING ALL LABORS, EQUIPMENTS, MATERIALS AND SUPPLIES NECESSARY FOR A COMPLETE AND OPERATIONAL ELECTRICAL SYSTEM. THE WORK SHALL ALSO INCLUDE THE COMPLETION OF ALL ITEMS OF ELECTRICAL WORK NOT MENTIONED OR SHOWN WHICH ARE NECESSARY FOR SUCCESSFUL OPERATION OF ALL SYSTEMS.

D. THE DRAWINGS INDICATE DIGRAMMATICALLY THE DESIRED LOCATIONS OR ARRANGEMENTS OF THE CONDUIT RUNS, OUTLETS, EQUIPMENTS, ETC. AND SHALL BE FOLLOWED IN EXECUTING THE WORK SO AS TO SECURE THE BEST POSSIBLE INSTALLATION IN THE AVAILABLE SPACE LIMITATIONS.

E. FEEDER AND BRANCH CIRCUITS RUN IN NON-METALLIC CONDUIT SHALL INCLUDE A CODE SIZED GROUNDING CONDUCTOR HAVING GREEN INSULATION. THE GROUND CONDUCTOR SHALL BE PROPERLY CONNECTED TO MAINTAIN ELECTRICAL CONTINUITY.

F. CONTRACTOR SHALL CHECK RESISTANCE BETWEEN BUILDING GROUND (ELECTRODES AND COLD WATER PIPING) AND TELEPHONE EQUIPMENT. MAXIMUM RESISTANCE SHALL NOT EXCEED 5 OHMS.

G. UTILITY SERVICE REQUIREMENTS ARE SHOWN ON THE DRAWINGS BASED ON INFORMATION AVAILABLE AT THE TIME AND ARE NOT GUARANTEED.

H. THE CONTRACTOR SHALL VERIFY THE EXACT METHOD AND REQUIREMENTS OF SERVICE BY UTILITY COMPANIES DURING BIDDING AND INCLUDE ALL COSTS FOR A COMPLETE SYSTEM IN THE BID.

I. PVC SCHEDULE 40 MAY BE USED AS PERMITTED BY CODE IN LIEU OF RIGID STEEL CONDUIT FOR UNDERGROUND APPLICATIONS ONLY. INSTALL A CODE SIZED INSULATED CONDUCTOR (GREEN) GROUND WIRE IN NON- METALLIC CONDUITS. USE RIGID STEEL ELBOWS.

NOT USED

SCALE: N.T.S. | 3

1. UNDERGROUND SERVICE CONDUIT FROM METER TO POLE, WITH MIN. 3" SAND BASE & 30" OF COVER TO FINISH GRADE.

2. ALL BENDS FOR SERVICE CONDUIT TO BE PVC SCHEDULE 80 & 3 FT. RADIUS SWEEP.

3. NOTIFY SDGE PLANNER PRIOR TO ANY CONSTRUCTION & FIELD VERIFY EXACT METER LOCATION & RISER QUADRANT AT THE SDGE POWER POLE. SCE PLANNER: -

4. ALL GROUNDINGS FOR METER & TRANSFORMERS MUST BE DONE PER NEC & LOCAL BLDG. & SAFETY REQUIREMENTS.

5. ALL CONDUIT TRENCHING FROM METER TO THE SITE MUST HAVE MIN. 30" OF COVER TO FINISH GRADE. INSTALL UNDERGROUND PULL BOXES AS REQD. PER NEC & LOCAL BLDG. & SAFETY REQUIREMENTS & MUST HAVE TRAFFIC COVERS.

6. ALL UNDERGROUND PULL BOXES MUST HAVE MIN. 2 FT. OF 1" CRUSHED ROCK AS BASE, AND TOP OF BOX TO BE 1 1/2" ABOVE FINISH GRADE. INDOOR: EMT (RGS IN TRAFFIC AREAS)

7. ALL WIRE SPLICES IN UNDERGROUND PULL BOXES DONE PER NEC.

8. WHEN COMMON TRENCHING IS USED FOR TELCO & POWER MIN. 12" SEPARATION BETWEEN POWER & TELCO CONDUITS IN THE TRENCH.

9. FIELD VERIFY EXACT TRENCH ROUTE.

10. SPRINT PCS METER PEDESTAL NEED TO BE LABELED & ALL CLEARANCES FOR ELECTRICAL EQUIPMENT BY NEC.

11. GROUND RODS MAYBE USED FOR SITE GROUNDING IF DESIRED RESISTANCE IS ACHIEVED.

UTILITY GENERAL NOTES

SCALE: N.T.S. | 4

LEGEND

SCALE: N.T.S. | 1

SYMBOLS	DESCRIPTION
	DUPLEX RECEPTACLE: 20A-125V-2P, 1W GROUNDING TYPE.
GFI	DUPLEX RECEPTACLE: 20A-125V-2P, 1W GROUND FAULT INTERUPTION TYPE.
S	TOGGLE SWITCH, 20A-125V, FLUSH MOUNT AT +48" OR AS NOTED. SUBSCRIPT AT SYMBOL INDICATES THE FOLLOWING: 2 - DOUBLE POLE; 3 - THREE WAY; 4 - FOUR WAY; K - KEY; I - MANUAL TIME SWITCH; P - PILOT LIGHT; A, B, C, D, FIXTURES CONTROLLED & QUANTITY OF SWITCHES.
	MD. MAIN DISTRIBUTION PANEL
	LIGHTING AND APPLIANCE PANEL
—P—	CONDUIT RUN CONCEALED BELOW FLOOR OR GRADE FOR POWER
	CONDUIT RUN CONCEALED ABOVE CEILING OR WALLS
—C—	CONDUIT ONLY CONCEALED IN EQUIPMENT BY EQUIPMENT CONTRACTOR. WIRING TO BE DONE BY ELECTRICAL CONTRACTOR.
	CONDUIT RUN CONCEALED BELOW FLOOR OR GRADE, 3/4" MINIMUM
—T—	TELEPHONE CONDUIT 3/4" MINIMUM
	CONDUIT STUB-UP
	CONDUIT STUB-DOWN
	HOMERUN TO PANEL, MATCH MARKS INDICATE NUMBER OF #12 WIRES IN CODE SIZE CONDUITS.
C.O.	CONDUIT ONLY
W.P.	WEATHER PROOF
J	JUNCTION BOX
M OR MBB	METER.
	CIRCUIT BREAKER

1. ALL DETAILS ARE SHOWN IN GENERAL TERMS. ACTUAL GROUNDING INSTALLATION REQUIREMENTS AND CONSTRUCTION ACCORDING TO SITE CONDITIONS.

2. ALL GROUNDING CONDUCTORS: #2 AWG SOLID BARE TINNED COPPER WIRE UNLESS OTHERWISE NOTED. WHERE APPLICABLE :

3. WHERE APPLICABLE : ALL BELOW GRADE CONNECTIONS: EXOTHERMIC WELD TYPE ABOVE GRADE CONNECTIONS: EXOTHERMIC WELD TYPE.

4. WHERE APPLICABLE : GROUND RING SHALL BE LOCATED A MINIMUM OF 24" BELOW GRADE OR 6" MINIMUM BELOW THE FROST LINE.

5. WHERE APPLICABLE : INSTALL GROUND CONDUCTORS AND GROUND ROD MINIMUM OF 1'-0" FROM EQUIPMENT CONCRETE SLAB, SPREAD FOOTING, OR FENCE

6. EXOTHERMIC WELD GROUND CONNECTION TO FENCE POST: TREAT WITH A COLD GALVANIZED SPRAY.

7. GROUND BARS:

A. EQUIPMENT GROUND BUS BAR (EGB) LOCATED AT BOTTOM OF ANTENNA POLE/MAST FOR MAKING GROUNDING JUMPER CONNECTIONS TO COAX FEEDER CABLES SHALL BE FURNISHED AND INSTALLED BY ELECTRICAL CONTRACTOR. JUMPERS (FURNISHED BY OWNERS) SHALL BE INSTALLED AND CONNECTED BY ELECTRICAL CONTRACTOR.

B. MAIN GROUND BUS BAR (MGB) LOCATED NEAR THE BASE OF THE RADIO EQUIPMENT CABINET(S) SHALL BE FURNISHED AND INSTALLED BY ELECTRICAL CONTRACTOR.

8. ALL GROUNDING INSTALLATIONS AND CONNECTIONS SHALL BE MADE BY ELECTRICAL CONTRACTOR.

9. OBSERVE N.E.C. AND LOCAL UTILITY REQUIREMENTS FOR ELECTRICAL RECOMMENDATIONS OR AT GROUNDING POINTS PROVIDED (2 MINIMUM). SERVICE GROUNDING.

10. GROUNDING ATTACHMENT TO TOWER SHALL BE AS PER MANUFACTURER'S

GROUNDING NOTES

SCALE: N.T.S. | 2

Sprint.
Sprint PCS™
2650 CAMINO DEL RIO NORTH, SUITE 100
SAN DIEGO, CA 92108

PROJECT INFORMATION:

FIRE STATION #19
SD34XC521
3434 "B" OCEANVIEW BLVD
SAN DIEGO, 92113
CITY OF SAN DIEGO

CURRENT ISSUE DATE: 11/26/02

ISSUED FOR: CONSTRUCTION

REV.:	DATE:	DESCRIPTION:	BY:
3	11/26/02	ISSUED FOR CITY COMMENTS	CS
2	11/22/02	ISSUED FOR FINAL REDESIGN	CS
1	11/01/02	ISSUED FOR PRELIM. CD'S REDESIGN	AL
0	10/18/02	ISSUED FOR FINAL C.D. REVISION	BC
0	08/20/02	ISSUED FOR FINAL CONSTRUCTION	CS
0	08/16/02	ISSUED FOR PRELIM. CONSTRUCTION	JM

PLANS PREPARED BY:

EAGLE TCS
7345 MISSION GORGE RD.
SUITE F
SAN DIEGO, CA 92120
TEL: 619-229-6191

CONSULTANT: REGISTERED PROFESSIONAL ENGINEER WALTER U. CAMP NO. 7061 Exp 9/06 ELECTRICAL

DRAWN BY: JJD

REVISIONS:

SHEET TITLE: GENERAL NOTES AND SINGLE LINE DIAGRAM

SHEET NUMBER: E5 | REVISION: 5

SD-521

EXHIBIT C

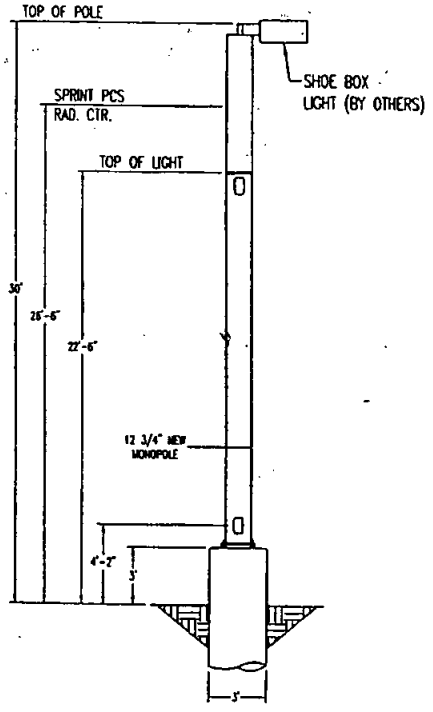

POLE ELEVATION

Sprint®

Sprint PCS

30' CONCEALMENT LIGHT POLE

Antenna Supporting Structure

FIRE STATION #19
SD34XC521
3434 "B" OCEANVIEW BLVD
SAN DIEGO, CA 92113

PAGE INDEX

PAGE/SHEET	PAGE TITLE
T-1	TITLE SHEET
S-1	STRUCTURAL DETAILS
S-2	FOUNDATION INSTALLATION DRAWING

REVISION RECORD

REV.	PAGE/SHEET	CHANGES MADE	DRAWN BY	CHECK BY	DATE
–	ALL	INITIAL SUBMITTAL	AWM	WSC	21NOV02

SCI
SOLAR COMMUNICATIONS INTERNATIONAL, INC.
8885 RIO SAN DIEGO DR.
Suite 207, San Diego, Ca 92108
Tel: (619) 243-2760; Fax: (619) 243-2749
www.SCIrenewpower.com

Sprint
Sprint PCS
18200 VON KARMEN AVE.
2ND FLOOR
IRVINE, CA 92612

SPRINT PCS
CUSTOMER

FIRE-STATION-#19
SITE NAME

SD34XC521
SITE NUMBER

3434"B"OCEANVIEW-BLVD
SAN DIAGO, CA 92113
SITE ADDRESS

SCS
DRAWN BY:

AWM
CHECKED BY:

02-0160-T1
DRAWING NUMBER:

21NOV02
ORIGINAL RELEASE DATE:

02-0160
WSC PROJECT NUMBER:

ENGINEERING SEAL:

REGISTERED PROFESSIONAL ENGINEER
ADRIAN McJUNKIN
C87075
EXP. 9/30/05
CIVIL
STATE OF CALIFORNIA
11/22/02

T-1
PAGE/SHEET NUMBER:

–
REVISION:

EXHIBIT C

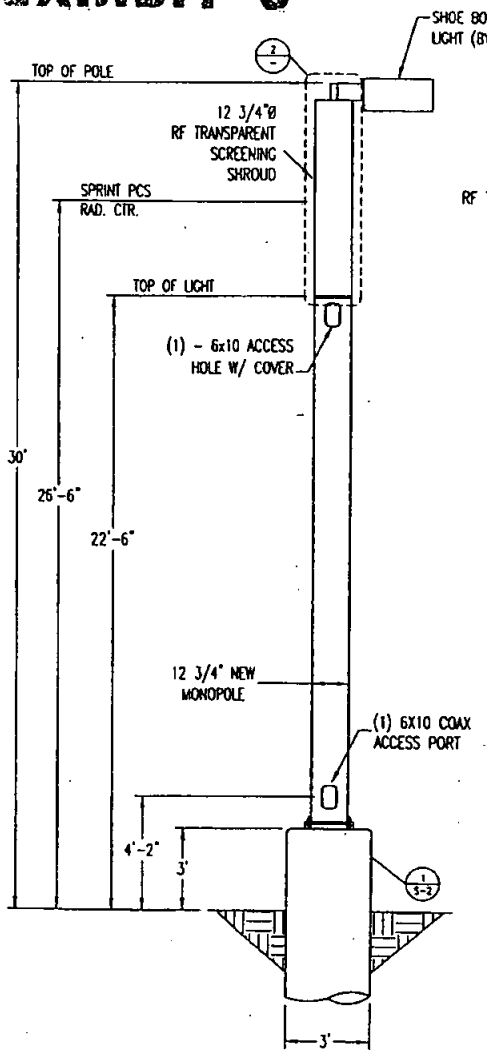

1 MONOOLE ELEVATION
SCALE: NONE

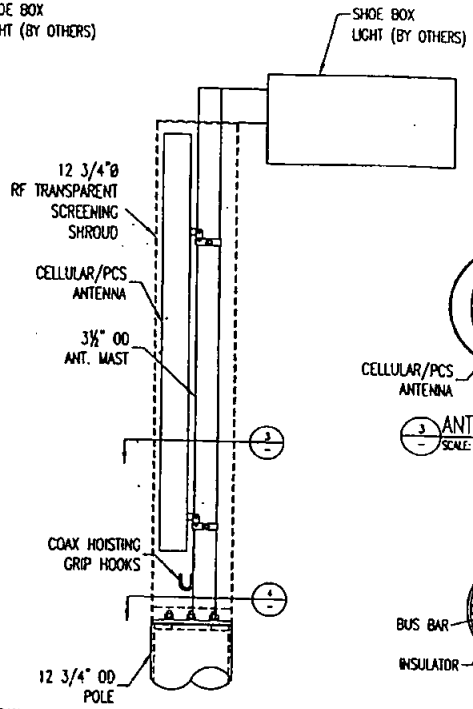

2 ANTENNA MAST DETAIL
SCALE: NONE

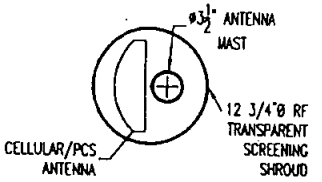

3 ANTENNA MAST SECTION
SCALE: NONE

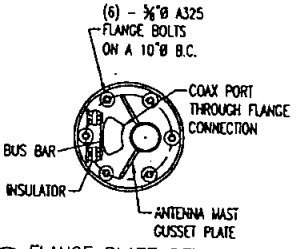

4 FLANGE PLATE DETAIL
SCALE: NONE

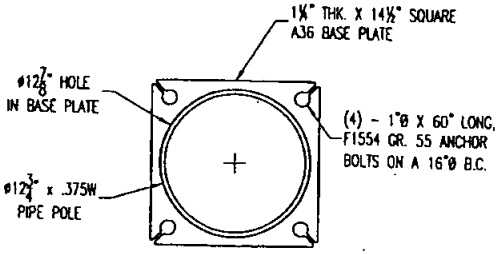

4 BASE PLATE DETAIL
SCALE: NONE

DESIGN NOTES AND MATERIAL REQUIREMENTS:

1) THE DESIGN CRITERIA FOR THIS STRUCTURE IS AS FOLLOWS:
   A) STANDARDS AND DESIGN CODES:
      INDUSTRY STANDARD: TIA/EIA 222 REV. F
      STEEL MANUAL: AISC 9TH EDITION
      CONCRETE CODE: ACI 318-02
      WELDING CODE: AWS D1.1
   B) DESIGN WIND:
      WIND: 80 MPH BWS
      ICE: ½" RADIAL (0.75X WIND LOAD)
      SOIL: PER IBRD INTERNATIONAL (PROJ. [01-113.3]), DATED JUNE 5, 2002.
   C) ANTENNA LOADING:
      1 - SPRINT PANEL ANTENNA MOUNTED INSIDE RADOME

   D) MAXIMUM BASE REACTIONS:
      OVERTURNING MOMENT = 12.6 FT-KIPS
      BASE SHEAR = 0.89 KIPS
      BASE WEIGHT = 1.22 KIPS

2) GENERAL STRUCTURAL NOTES:
   A) ALL MATERIALS SHALL CONFORM TO THE FOLLOWING STANDARDS:
      SHAPES/PLATES: ASTM A36
      PIPE: ASTM A53 GR. B (MIN FY=35 KSI)
      ANCHOR BOLTS: ASTM F1554 GR. 55
      HARDWARE: ASTM A325 AND/OR SAE GR. 5
   B) ALL WELDING TO BE PERFORMED IN AN APPROVED FABRICATOR'S SHOP IN ACCORDANCE WITH 1781.7. FIELD WELDING IS PROHIBITED.
   C) ALL STRUCTURAL STEEL SHALL BE GALVANIZED IN ACCORDANCE WITH ASTM A123.
   D) ALL STRUCTURAL BOLTS SHALL BE TIGHTENED TO SNUG-TIGHT AS DEFINED BY AISC 9TH ED., PG. 5-273

GENERAL CONSTRUCTION NOTES:

1) CONTRACTOR SHALL FIELD VERIFY SITE OR LAYOUT RESTRICTIONS, SITE CONDITIONS, DIMENSIONS, AND ELEVATIONS BEFORE START OF CONSTRUCTION. ANY DISCREPANCIES SHALL BE BROUGHT TO THE ATTENTION OF SCI, INC. PRIOR TO BEGINNING PROJECT. ALL WORK SHALL BE PERFORMED USING ACCEPTED CONSTRUCTION PRACTICES.
2) ALL STRUCTURAL COMPONENTS ARE SHOP WELDED FOR BOLTED FIELD ASSEMBLY. THE CONTRACTOR SHALL NOTIFY SCI, INC. AND THE ENGINEER FOR APPROVAL PRIOR TO ANY NECESSARY FIELD MODIFICATIONS OF THE PREFABRICATED PARTS.
3) THE CONTRACTOR AND ALL SUBCONTRACTORS SHALL COMPLY WITH ALL LOCAL CODES, REGULATIONS, AND ORDINANCES AS WELL AS STATE DEPARTMENT OF INDUSTRIAL REGULATIONS AND DIVISION OF INDUSTRIAL SAFETY (DISH) REQUIREMENTS.
4) THE CONTRACTOR SHALL SUPERVISE AND DIRECT ALL WORK TO THE BEST OF HIS/HER ABILITY AND SKILL. CONTRACTOR SHALL BE SOLELY RESPONSIBLE FOR ALL CONSTRUCTION MEANS, METHODS, TECHNIQUES, PROCEDURES, AND SEQUENCES, AND FOR COORDINATING ALL PORTIONS OF THE WORK UNDER THE CONTRACT.
5) THE CONTRACTOR SHALL VERIFY, COORDINATE, AND PROVIDE ALL NECESSARY BLOCKING, BRACING, FRAMING, HANGERS, OR OTHER SUPPORTS FOR ALL ITEMS REQUIRING SAME, WHETHER SHOWN OR NOT. THE CONTRACTOR SHALL BE RESPONSIBLE FOR ALL TEMPORARY BRACING, SHORING, FORMWORK, ETC., AND SHALL CONFORM TO ALL NATIONAL, STATE, AND LOCAL ORDINANCES AND CODES, IN ORDER TO SAFELY EXECUTE ALL STAGES OF WORK TO COMPLETE THIS PROJECT.
6) IT IS THE INTENT OF THESE DRAWINGS TO SHOW THE PROPOSED STRUCTURE FOR THE PURPOSE OF PERMITTING. ALL INSTALLATION DRAWINGS WILL BE GENERATED ONCE FABRICATION DETAILS ARE COMPLETED.
7) CONTRACTOR ASSUMES RESPONSIBILITY FOR JOB SITE CONDITIONS DURING THE COURSE OF CONSTRUCTION OF THE PROJECT, INCLUDING THE SAFETY OF ALL PERSONS AND PROPERTY IN ACCORDANCE WITH GENERALLY ACCEPTED CONSTRUCTION PRACTICES. THIS REQUIREMENT APPLIES CONTINUOUSLY, AND IS NOT LIMITED TO NORMAL WORKING HOURS.
8) CONTRACTOR TO HOLD ENGINEER HARMLESS FROM ANY AND ALL LIABILITY, REAL OR ALLEGED, IN CONNECTION WITH THE PERFORMANCE OF WORK ON THIS PROJECT.
9) IT IS THE RESPONSIBILITY OF THE CONTRACTOR TO LOCATE ALL EXISTING UTILITIES, SHOWN OR NOT SHOWN, ABOVE OR BELOW GROUND. THE CONTRACTOR IS FINANCIALLY RESPONSIBLE FOR REPAIR OR REPLACEMENT OF UTILITIES OR OTHER PROPERTY DAMAGED IN CONJUCTION WITH THE EXECUTION OF WORK ON THIS PROJECT.
10) DAMAGED GALVANIZED SURFACES WHERE BARE METAL/STEEL IS EXPOSED SHALL BE REPAIRED USING A "ZINC-ROX" GALVANIZING SPRAY.
11) SEE FOUNDATION INSTALLATION DRAWING FOR ALL RELATED NOTES FOR CONSTRUCTION OF FOUNDATION.

SPECIAL INSPECTION:
THE FOLLOWING ELEMENTS OF CONSTRUCTION SHALL REQUIRE SPECIAL INSPECTION PER 1997 UBC, SECTION 1701.

ITEM	DESCRIPTION	INSPECTION BY	MATERIAL
1	HIGH STRENGTH BOLT TIGHTENING PER AISC 9TH ED., PG. 5-273 PARAGRAPH B (C)	SPECIAL INSPECTOR	ASTM A325/A563 GALVANIZED NUTS
2	FABRICATION PERFORMED BY SCI, INC. APPROVED SHOP FABRICATOR		

SCI
SOLAR COMMUNICATIONS INTERNATIONAL, INC.
8885 RIO SAN DIEGO DR.
Suite 207, San Diego, CA 92108
Tel: (619) 543-2750; Fax: (619) 543-2749
www.SCITransparent.com

Sprint
Sprint PCS
2650 CAMINO DEL RIO NORTH
SUITE 100
SAN DIEGO, CA 92108

SPRINT PCS
CUSTOMER

FIRE-STATION-#19
SITE NAME

6034XC521
SITE NUMBER

3434"B"OCEANVIEW-BLVD
SAN-DIEGO,CA-92113
SITE ADDRESS

AWM
DRAWN BY:

WSC
CHECKED BY:

02-0160-61
DRAWING NUMBER:

21NOV02
ORIGINAL RELEASE DATE:

02-0160
WSC PROJECT NUMBER:

ENGINEERING SEAL:
REGISTERED PROFESSIONAL ENGINEER
ADRIAN McJUNKIN
C57018
EXP. 9/30/05
CIVIL
STATE OF CALIFORNIA
11/22/02

S-1
PAGE/SHEET NUMBER:

-
REVISION:

EXHIBIT C

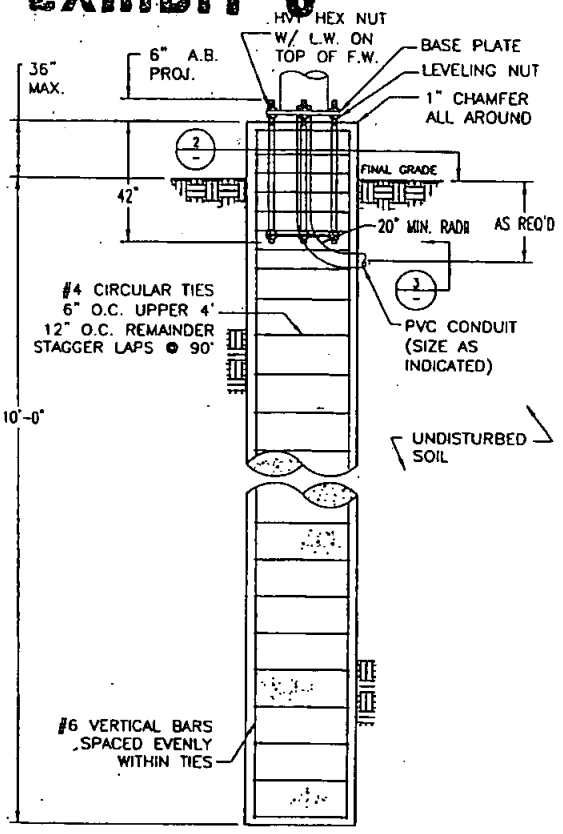

1 ELEVATION DETAIL
NO SCALE

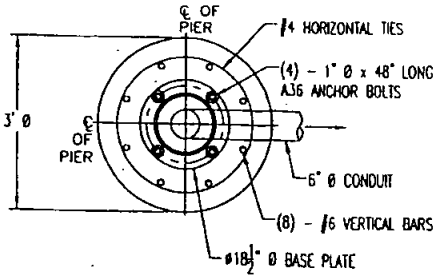

2 PLAN VIEW
NO SCALE

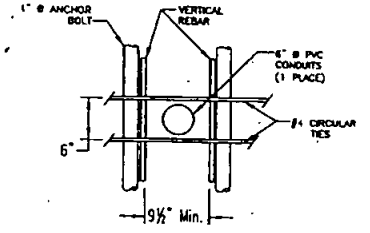

3 CONDUIT DETAIL
NO SCALE

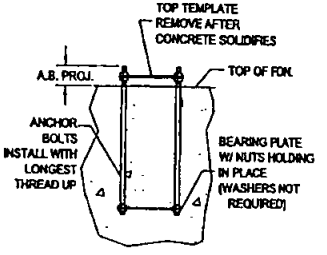

4 ANCHOR BOLT ASSEMBLY
NO SCALE

PIER FOUNDATION NOTES

1. CONTRACTOR IS RESPONSIBLE FOR CHECKING AREA FOR UNDERGROUND FACILITIES PRIOR TO EXCAVATING ANY MATERIALS.
2. CONTRACTOR SHALL REFER TO SOILS REPORT FOR SITE CONDITIONS AND FURTHER CONSTRUCTION INFORMATION.
3. CONTRACTOR SHALL INSPECT AND REMOVE ALL DEBRIS FROM BOTTOM OF EXCAVATION.
4. CONTRACTOR SHALL VERIFY ANCHOR BOLT LAYOUT PRIOR TO, AND IMMEDIATELY AFTER PLACING CONCRETE. ANCHOR BOLT LAYOUT IS CRITICAL FOR MONOPOLE INSTALLATION.
5. CONTRACTOR SHALL USE AND PROVIDE DEFORMED REINFORCING BARS CONFORMING TO ASTM A615 GR. 60 (60,000 PSI MIN. YIELD). CONTRACTOR SHALL USE STEEL WIRE TO HOLD REINFORCING BARS TOGETHER. IF WELDING REBAR IS PREFERRED, SUBSTITUTE USING A706 GR. 60 DEFORMED BARS.
   UNLESS OTHERWISE NOTED, CONTRACTOR SHALL USE 3" CONCRETE COVER OVER REBAR.
6. CONTRACTOR SHALL USE AND PROVIDE CONCRETE WITH A MINIMUM COMPRESSIVE STRENGTH OF 4,000 PSI @ 28 DAYS. CONCRETE SHALL USE 3/4" MAXIMUM STONE AGGREGATE. MIX DESIGN: 6½ SACKS OF CEMENT MINIMUM PER CUBIC YARD. 4" MINIMUM AND 6" MAXIMUM CONCRETE SLUMP.
7. CONCRETE SHALL BE CONSOLIDATED USING VIBRATORY METHODS THROUGHOUT DEPTH OF FOUNDATION. VIBRATING LOWER DEPTHS MAY BE ACCOMPLISHED BY TOUCHING REBAR CAGE WITH VIBRATOR.
8. CONTRACTOR SHOULD ANTICIPATE THE USE OF A FULL-LENGTH TEMPORARY CASING TO STABALIZE THE EXCAVATION. THE CASING SHALL BE WITHDRAWN DURING THE PLACEMENT OF CONCRETE IN THE EXCAVATED HOLE. CONCRETE SHALL BE PLACED USING CONVENTIONAL METHODS TO MINIMIZE SEGREGATION OF CONCRETE AND AGGREGATE. CONCRETE SHALL NOT FREE FALL MORE THAN 5 FT.
9. CONCRETE SHALL BE PLACED TO THE DEPTH INDICATED, AND THE ABOVE GRADE PORTION SHALL BE FORMED. THE REBAR CAGE, ANCHOR BOLTS, AND CONCRETE SHALL BE PLACED WITHIN 24 HOURS OF COMPLETING THE EXCAVATION. COLD JOINTS ARE NOT ALLOWED.
10. THE CONTRACTOR IS RESPONSIBLE FOR VERIFYING ADEQUATE CONCRETE COVERAGE OVER REINFORCING BARS TO MINIMIZE CORROSION POTENTIAL. UNLESS OTHERWISE NOTED, CONTRACTOR SHALL USE 3" CONCRETE COVER OVER REBAR. TOP OF FOOTING SHALL BE TROWELLED LEVEL AND SMOOTH.
11. DRILLED PIER FOUNDATION DESIGN BASED ON SOILS REPORT BY TORO INTERNATIONAL (PROJ. #01-113.32), DATED JUNE 5, 2002.
12. TOTAL VOLUME OF CONCRETE REQUIRED FOR THIS FOUNDATION IS APPROXIMATELY 4.3 CU. YDS.

REINFORCEMENT SUMMARY:

VERTICAL BARS: 8 - #6 X 12'-6" LONG A615 GR. 60 DEFORMED BARS SPACED EVENLY (APPR 10" O.C.) WITHIN CIRCULAR TIES

HORIZONTAL TIES: 14 - #4 CIRCULAR TIES, 28 IN. DIAMETER, WITH 24 IN. LAP, SPACE AT 6 IN O.C. IN UPPER 4 FT. AND 12 IN O.C. IN REMAINDER OF PIER

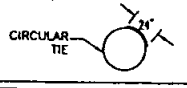

MONOPOLE BASE REACTIONS:

MOMENT	=	12.9 FT-KIPS
SHEAR	=	0.76 KIPS
VERTICAL	=	1.37 KIPS

SPECIAL INSPECTION:
THE FOLLOWING ELEMENTS OF CONSTRUCTION SHALL REQUIRE SPECIAL INSPECTION PER 1997 UBC, SECTION 1701.

ITEM	DESCRIPTION	INSPECTION BY	MATERIAL
1	PIER EXCAVATION LATERAL BEARING CAPACITY	SOILS ENGINEER	305 PSF/FT LATERAL
2	PIER CONSTRUCTION REINFORCING STEEL BAR SIZES AND INSTALLATION	SPECIAL INSPECTOR	ASTM A615 GRADE 60
3	ANCHOR BOLTS BOLT SIZE AND LENGTHS INSTALLATION	SPECIAL INSPECTOR	ASTM F1554 GR. 55
4	CONCRETE TEST SPECIMENS PLACEMENT OF CONCRETE	SPECIAL INSPECTOR	f'c = 4,000 PSI TYPE II CEMENT
5	HIGH STRENGTH BOLT TIGHTENING PER AISC 9TH ED., PG. 5-273 PARAGRAPH 8 (C)	SPECIAL INSPECTOR	ASTM A563 GALVANIZED NUTS
6	FABRICATION PERFORMED BY SCI, INC. APPROVED SHOP FABRICATOR		

SCI
SOLAR COMMUNICATIONS INTERNATIONAL, INC.
8665 RIO SAN DIEGO DR.
Suite 207, San Diego, CA 92108
Tel: (619) 243-2750; Fax: (619) 243-2749
www.SCIcomparent.com

Sprint
Sprint PCS
18200 VON KARMEN AVE.
2ND FLOOR
IRVINE, CA 92612

SPRINT PCS
CUSTOMER

FIRE-STATION-#19
SITE NAME

6034XC521
SITE NUMBER

3434"B"OCEANVIEW-BLVD
SAN-DIEGO,CA-92113
SITE ADDRESS

AWM
DRAWN BY:

WSC
CHECKED BY:

02-0160-62
DRAWING NUMBER:

21NOV02
ORIGINAL RELEASE DATE:

02-0160
WSC PROJECT NUMBER:

ENGINEERING SEAL:
REGISTERED PROFESSIONAL ENGINEER
ADRIAN McJUNKIN
C051915
EXP. 9/30/05
CIVIL
STATE OF CALIFORNIA
11/22/02

S-2
PAGE/SHEET NUMBER:

REVISION: